SECTION V

PAVEMENT AND ROADWAY DETAILS

SECTION V

PAVEMENT AND ROADWAY DETAILS:

R-1	TYPICAL 20’ ROW ROADWAY CROSS-SECTION
R-2	TYPICAL HALF 20’ ROW ROADWAY CROSS-SECTION
R-3	TYPICAL 40’ ROW ROADWAY CROSS-SECTION
R-4	TYPICAL 50’ ROW ROADWAY CROSS-SECTION
R-5	FOUR (4) LANE DIVIDED ARTERIAL CROSS-SECTION
R-6	TYPICAL SIDEWALK DETAIL
R-7	DETECTABLE WARNING DETAIL
R-8	CONCRETE SIDEWALK LANDING DETAIL
R-9	DRIVEWAY DETAIL
R-10	RESIDENTIAL DRIVEWAY SPACING
R-11	COMMERCIAL/INDUSTRIAL DRIVEWAY SPACING
R-12	CUL DE SAC DETAIL
R-13	CURB AND GUTTER TYPES DETAIL
R-14	HANDICAP PARKING DETAIL
R-15	SPEED HUMP DETAIL
R-16	TRAFFIC CALMING CONSTRUCTION DETAIL-ENHANCED SPEED HUMP
R-17	TRAFFIC CALMING STANDARD PAVEMENT MARKING AND SIGNAGE DETAIL-ENHANCED SPEED HUMP
R-18	TRAFFIC CALMING GRADING DETAIL-ENHANCED SPEED HUMP

R-19	STOP SIGN & ST. IDENTIFICATION ASSEMBLY DETAIL
R-20	CONCRETE POLE MOUNTING DETAIL
R-21	FIBERGLASS POLE WITH POLE GUARD DETAIL
R-22	TYPICAL HORSE CROSSING DETAILS
R-23	TYPICAL SIGHT RESTRICTIONS FOR ACCESS TO ARTERIAL ROAD
R-24	INTERSECTION SIGHT DISTANCE (LOCAL ROADS)
R-25	EMERGENCY ACCESS ROAD DETAIL

V:\Projects\2007\07-00090 - Town Of Davie Eng Manual\Documents\Reports\7TODManual1st round of comments8107.doc

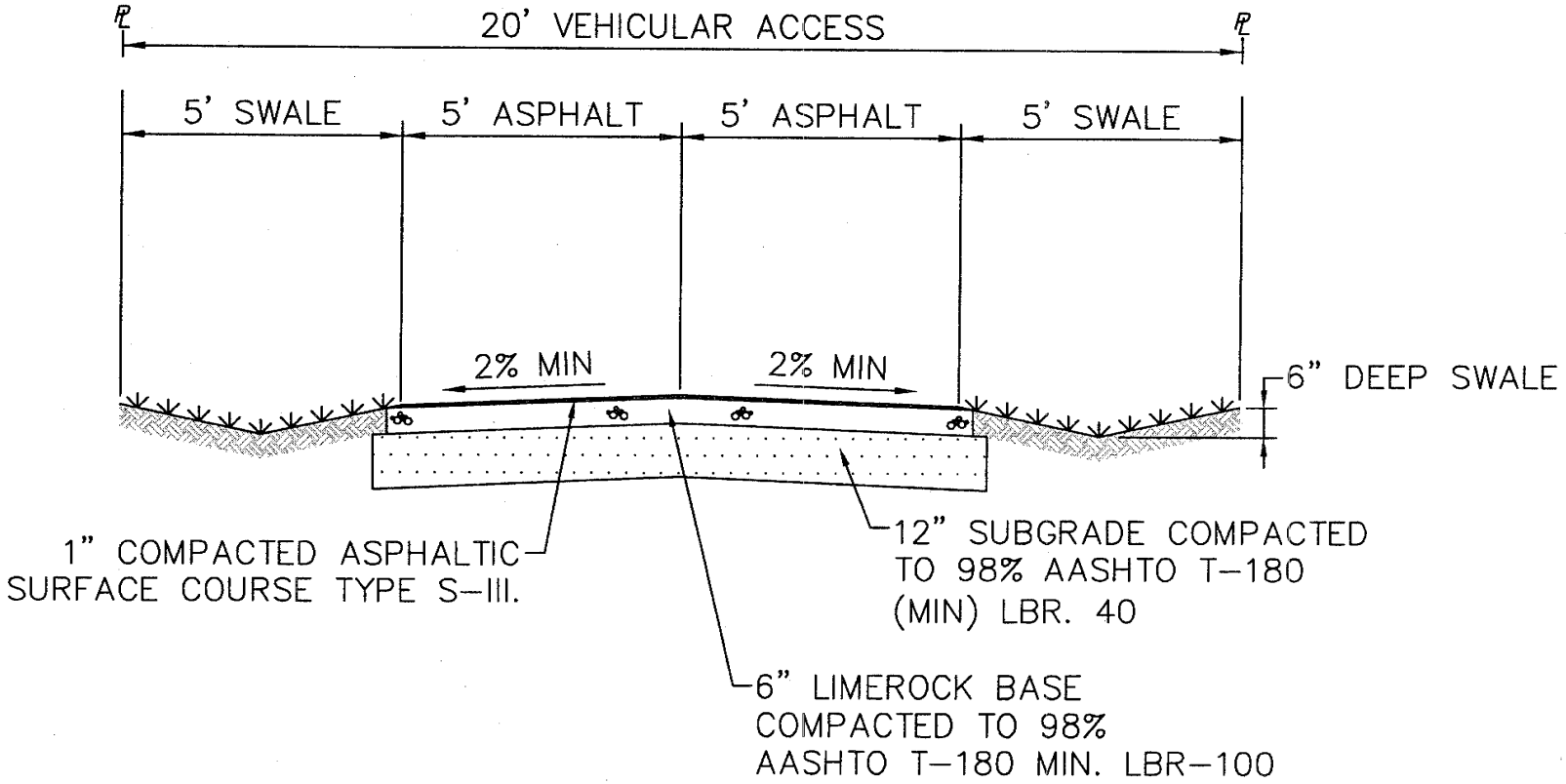

TOWN OF DAVIE STANDARD PAVING AND DRAINAGE DETAILS AND NOTES

TYPICAL 20' ACCESS CROSS SECTION

N.T.S.

ISSUE DATE: _____

REVISED: _____

R-1

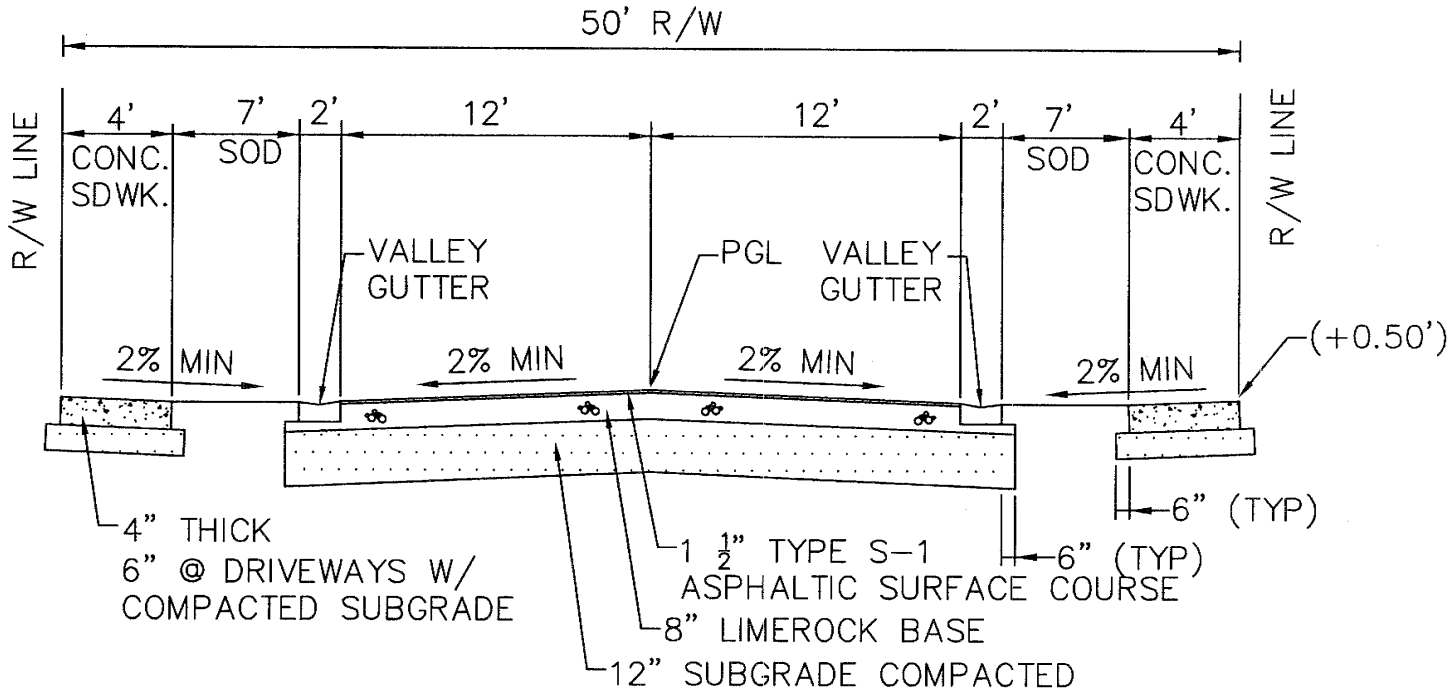

TOWN OF DAVIE FLORIDA	TOWN OF DAVIE STANDARD PAVING AND DRAINAGE DETAILS AND NOTES	TYPICAL 50' RIGHT OF WAY ROADWAY CROSS SECTION WITH CURB N.T.S.	ISSUE DATE: _____ REVISED: _____	R-2

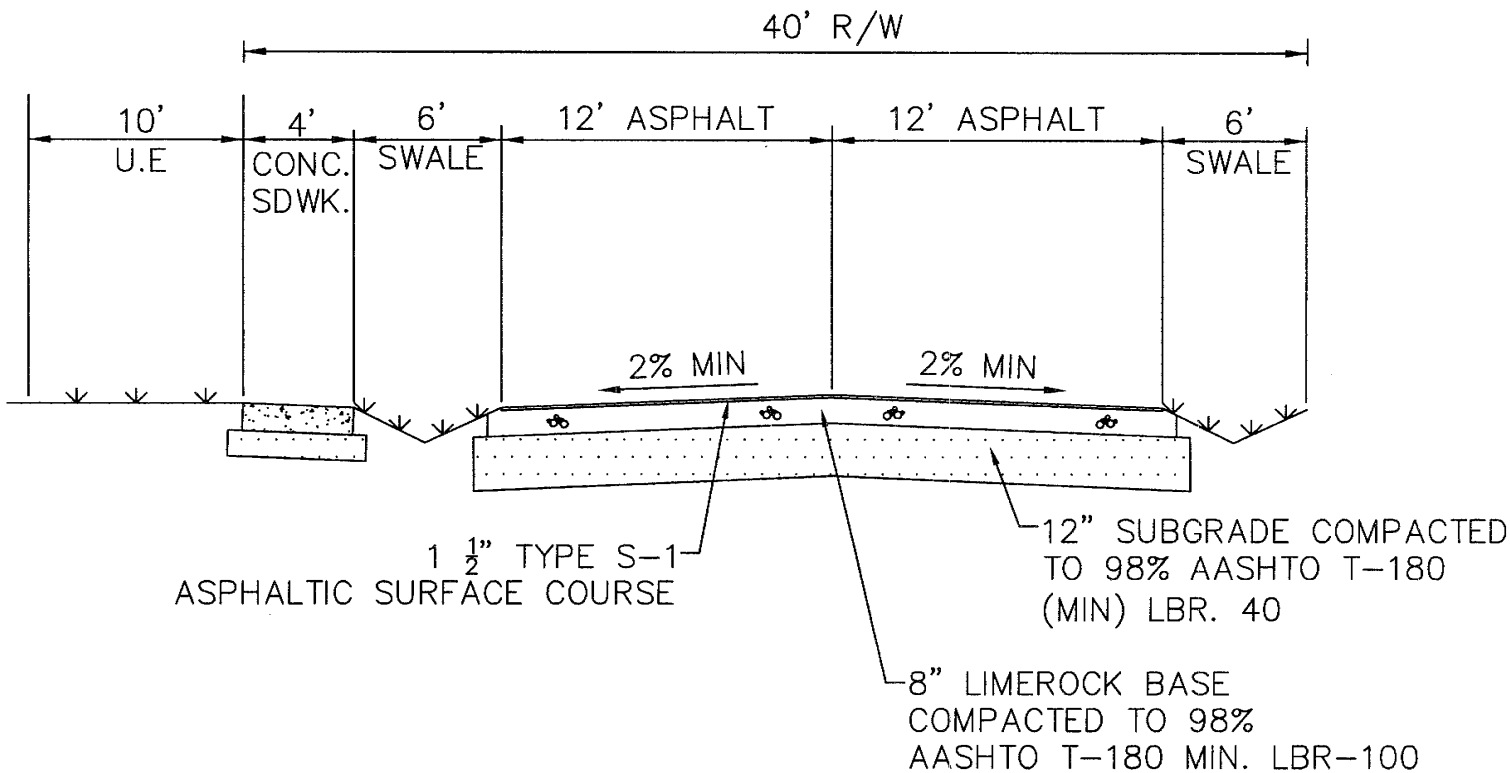

TOWN OF DAVIE STANDARD PAVING AND DRAINAGE DETAILS AND NOTES	TYPICAL RURAL 40' RIGHT OF WAY ROADWAY CROSS SECTION N.T.S.	ISSUE DATE: _____ REVISED: _____	R-3

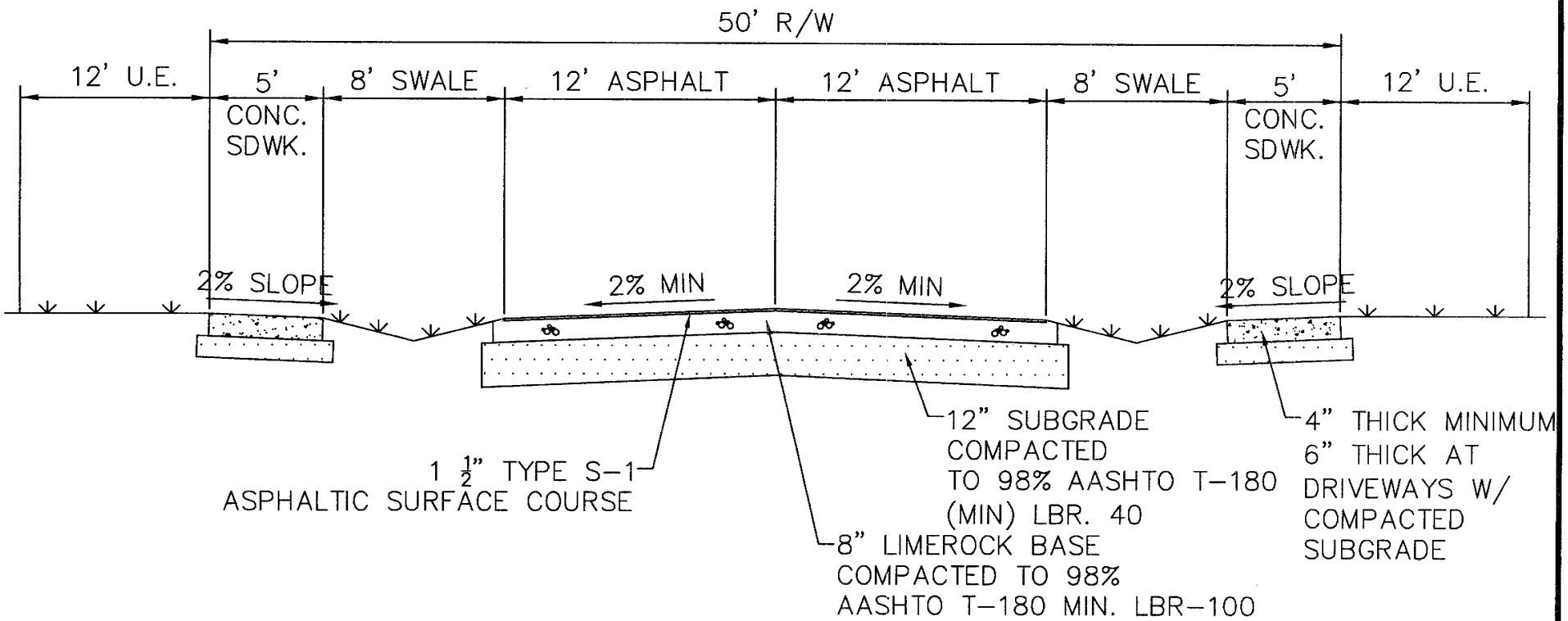

TOWN OF DAVIE STANDARD PAVING AND DRAINAGE DETAILS AND NOTES	TYPICAL 50' RIGHT OF WAY ROADWAY CROSS SECTION WITH SWALE N.T.S.	ISSUE DATE: _____ REVISED: _____	R-4

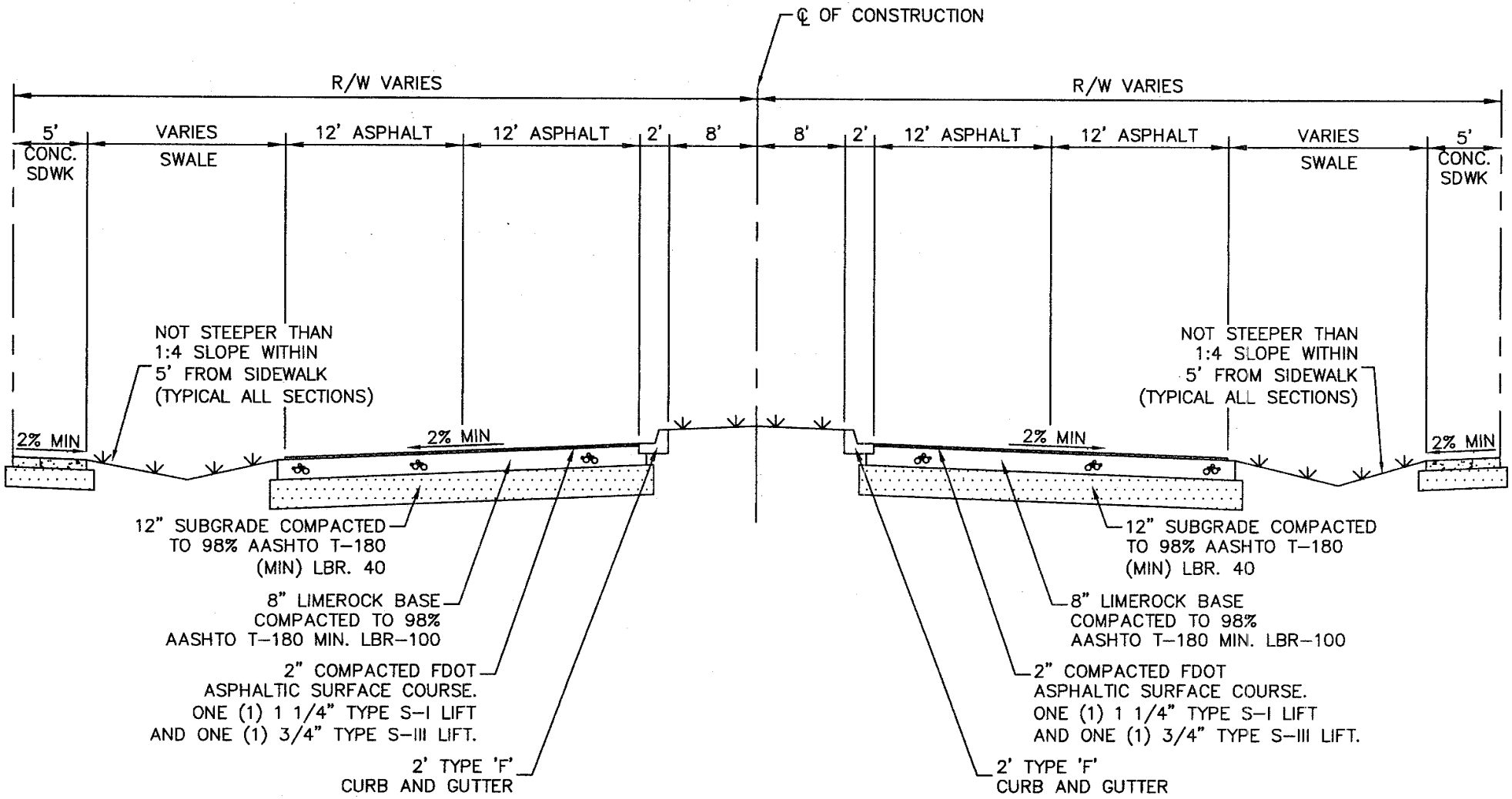

TOWN OF DAVIE STANDARD PAVING AND DRAINAGE DETAILS AND NOTES

TYPICAL FOUR-LANE DIVIDED COLLECTOR/ARTERIAL CROSS SECTION

N.T.S.

ISSUE DATE: _____

REVISED: _____

R-5

NOTES:

1. CONCRETE TO BE CLASS 1, 3,000 P.S.I.
2. 4" THK. MIN. (TYP.); 6" THK. AT DRIVEWAYS, EXTENDED TWO-FEET BEYOND DRIVE, ON BOTH SIDES.
3. SIDEWALK SLOPES SHALL MEET THE REQUIREMENTS OF THE AMERICANS WITH DISABILITIES ACT.
4. CONSTRUCT EXPANSION JOINTS AT SPACINGS SHOWN ABOVE; AT POINT OF CURVATURE; AT ADJOINING STRUCTURES; AND, AT THE END OF DAYS WORK.

SIDEWALK JOINTS	
TYPE	LOCATION
"A"	P.C. P.T. OF CURVES
"B"	5'-0" CENTER TO CENTER ON SIDEWALKS

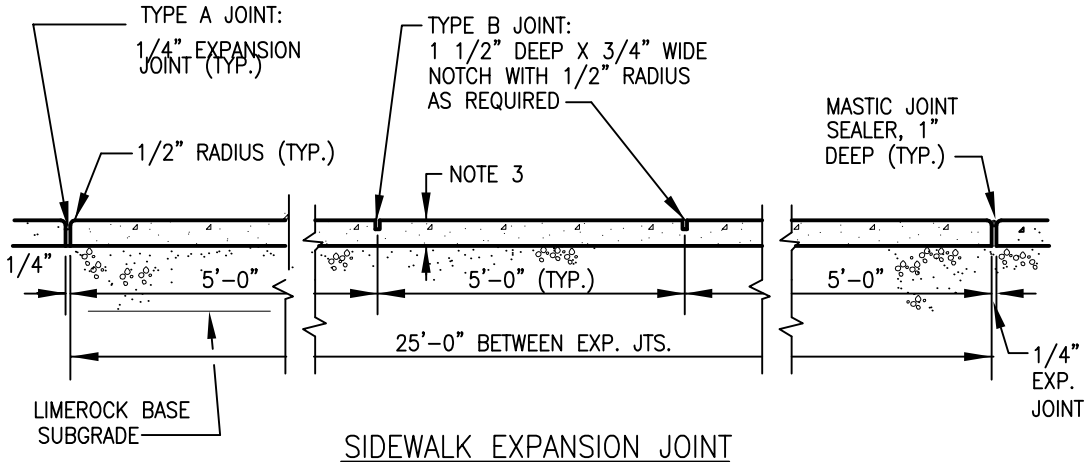

SIDEWALK EXPANSION JOINT
LONGITUDINAL SECTION

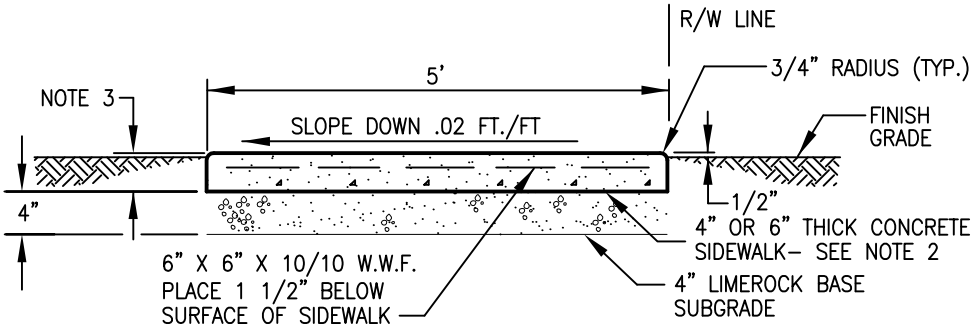

SIDEWALK SECTION

TOWN OF DAVIE FLORIDA	TOWN OF DAVIE STANDARD PAVING AND DRAINAGE DETAILS AND NOTES	TYPICAL SIDEWALK DETAIL N.T.S.	ISSUE DATE: _____ REVISED: _____	R-6

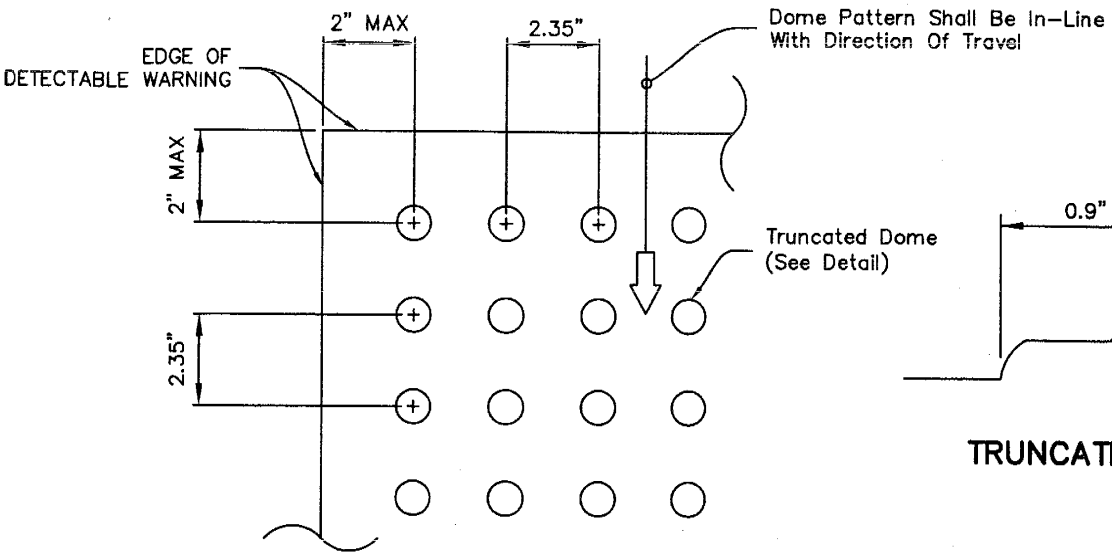

PLAN VIEW

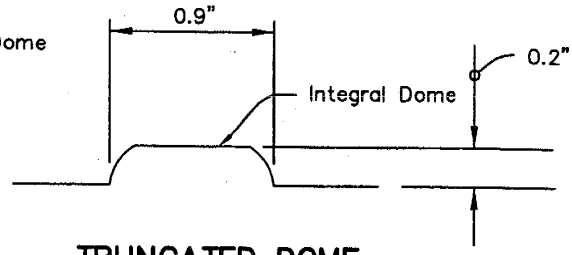

TRUNCATED DOME

NOTES:

1. DETECTABLE WARNINGS SHALL EXTEND THE FULL WIDTH AND DEPTH OF THE CURB RAMP.
2. WHEN NOT PLACED ON CURB RAMPS, DETECTABLE WARNINGS SHALL BE PLACED ON THE WALKING SURFACES ADJOINING A VEHICULAR WAY. THE BOUNDARY BETWEEN THE AREAS SHALL BE DEFINED BY A CONTINUOUS DETECTABLE WARNING WHICH IS 36" WIDE.
3. DETECTABLE WARNING SURFACES SHALL CONTRAST VISUALLY WITH ADJOINING SURFACES. THE MATERIAL USED TO PROVIDE CONTRAST SHOULD CONTRAST BY AT LEAST 70 %
4. 90% OF THE INDIVIDUAL TRUNCATED DOMES MUST COMPLY WITH THE DESIGN CRITERIA.
5. NO TWO ADJACENT DOMES MAY BE NON-COMPLIANT.
6. SURFACE MAY NOT DEVIATE MORE THAN 0.1" FROM A TRUE PLAN.

TOWN OF DAVIE STANDARD PAVING AND DRAINAGE DETAILS AND NOTES	DETECTABLE WARNING DETAIL N.T.S.	ISSUE DATE: _____ REVISED: _____	R-7

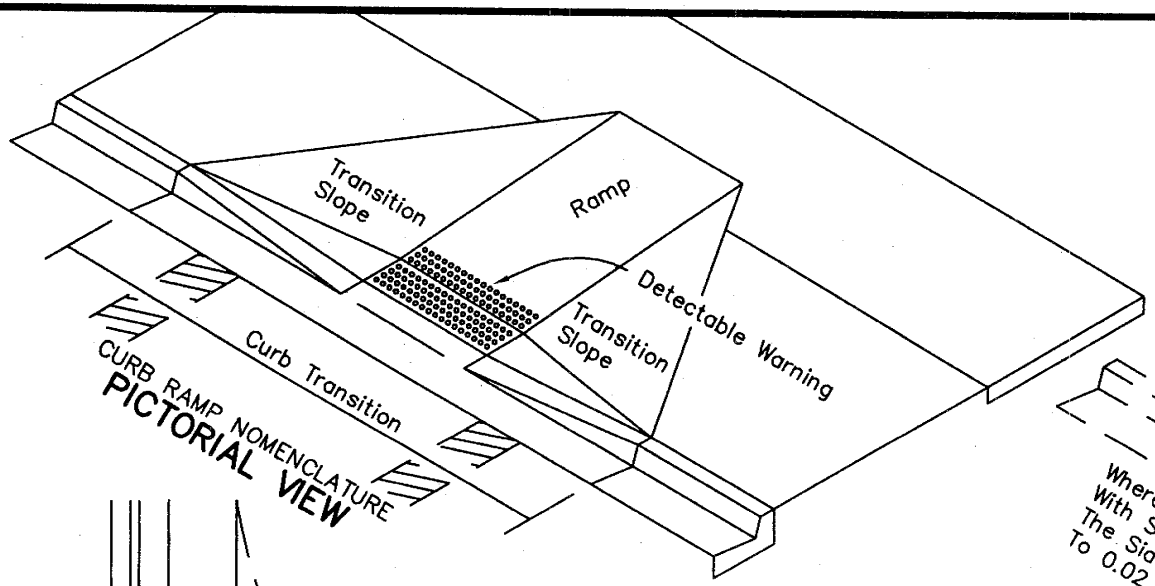

CURB RAMP NOMENCLATURE
PICTORIAL VIEW

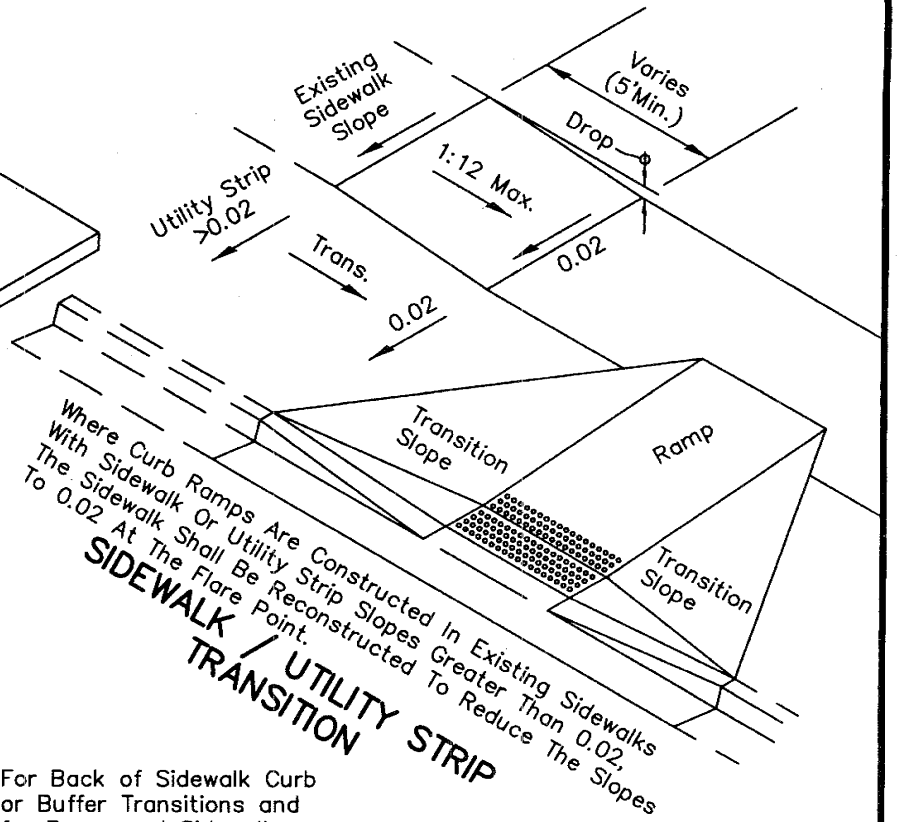

Where Curb Ramps Are Constructed In Existing Sidewalks With Sidewalk Or Utility Strip Slopes Greater Than 0.02, The Sidewalk Shall Be Reconstructed To Reduce The Slopes To 0.02 At The Flare Point.

SIDEWALK / UTILITY STRIP TRANSITION

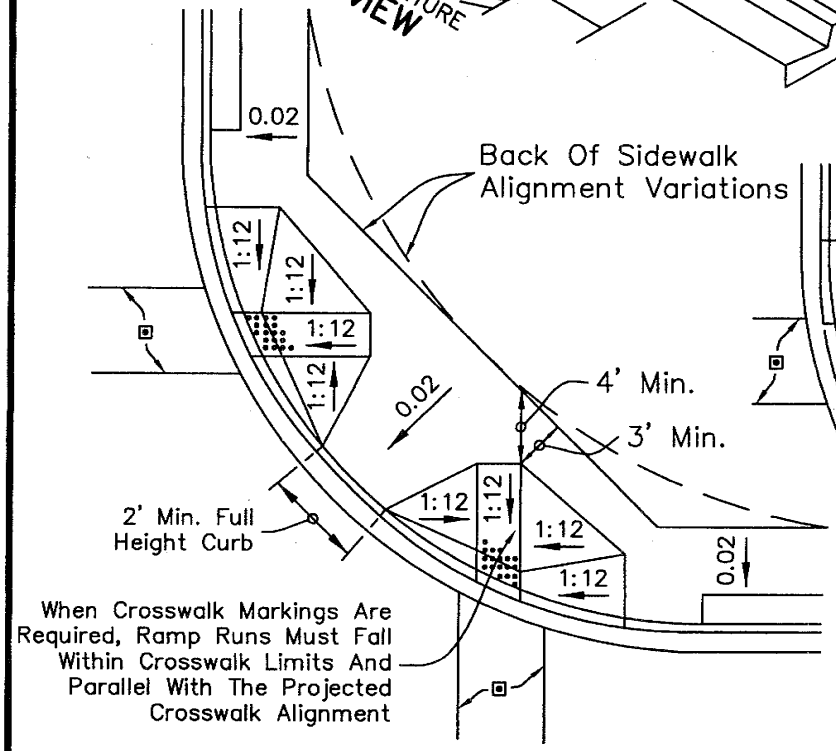

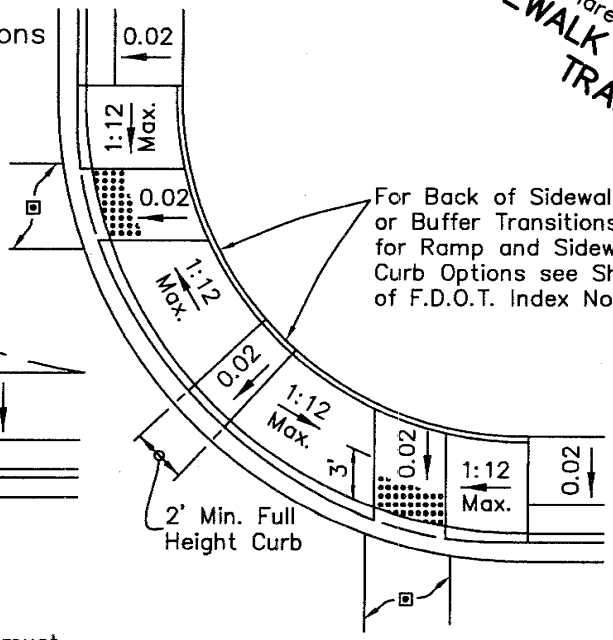

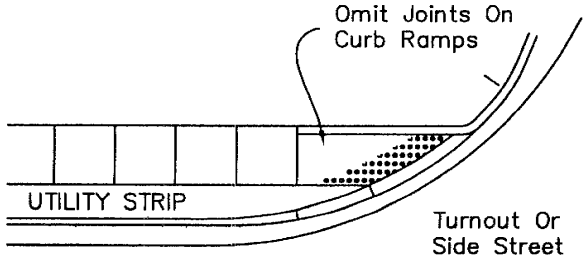

LINEAR SIDEWALK RAMPS

▣ Crosswalk widths and configurations vary; must conform to F.D.O.T. Index No. 17344 and 17346

Note: A portion of one or both ramps may extend outside the return

TOWN OF DAVIE STANDARD PAVING AND DRAINAGE DETAILS AND NOTES	CONCRETE SIDEWALK LANDING DETAIL N.T.S.	ISSUE DATE: _____ REVISED: _____	R-8

NOTE: GRADING AND PREPARATION OF SUBGRADE SHALL BE APPROVED BY THE TOWN ENGINEER PRIOR TO APPLICATION OF PAVING MATERIALS.

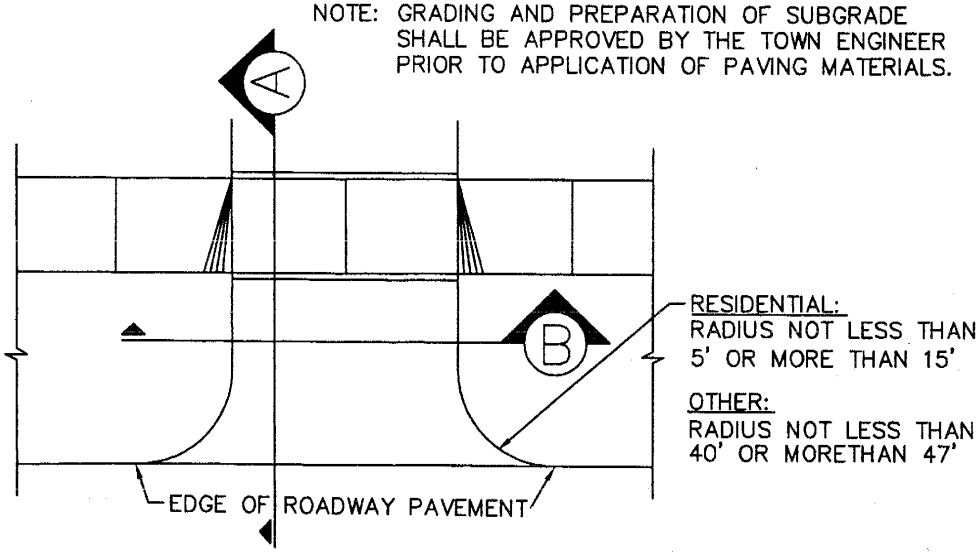

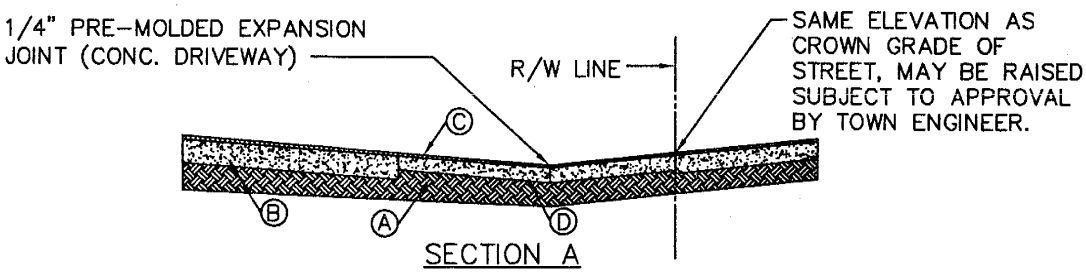

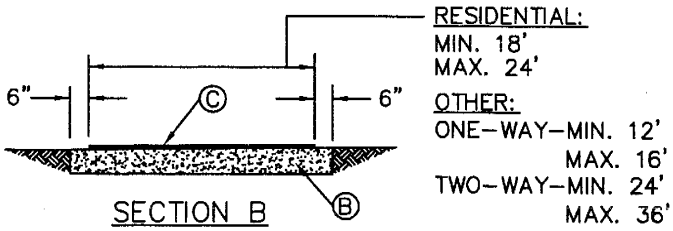

Ⓐ CLEAN AND COMPACT SUBGRADE

Ⓑ BASE COURSE (6" THICK MIN.)

Ⓒ ASPHALTIC CONCRETE SURFACE COURSE:
1" THICK MIN. COMPACTED (RESIDENTIAL)
1 1/2" THICK MIN. COMPACTED (COMMERCIAL & INDUSTRIAL)

Ⓓ 6" MIN. LIMEROCK BASE COURSE FOR ASPHALT DRIVEWAYS.
6" MIN. 3,000 PSI CONCRETE REINFORCED WITH 6" x 6" 10/10 WELDED WIRE MESH FOR CONCRETE DRIVEWAYS.

TOWN OF DAVIE FLORIDA	TOWN OF DAVIE STANDARD PAVING AND DRAINAGE DETAILS AND NOTES	DRIVEWAY DETAIL N.T.S.	ISSUE DATE: _____ REVISED: _____	R-9

NOTES:

1. LOT SIZE SHALL BE DETERMINED BY ADDING THE LENGTH OF THE REAR LOT LINE TO THE LENGTH OF THE FRONT LOT LINE AND DIVIDING SUCH SUM BY TWO .
2. IN NO INSTANCE SHALL THE TOTAL WIDTH OF ALL DRIVEWAYS EXCEED 40% OF THE LOT WIDTH.
3. DRIVEWAYS CONSTRUCTED OF CONCRETE SHALL NOT BE PERMITTED IN THE PUBLIC RIGHT-OF-WAY
4. THE LIMITS WITHIN WHICH DRIVEWAYS MAY NOT BE CONSTRUCTED ARE DETERMINED BY MEASURING FROM THE P.I. OF R/W LINE A DISTANCE OF 25' ALONG THE R/W LINE CURVE TANGENTS.
5. ALL DRIVEWAYS MUST BE CONSTRUCTED SO THAT NO PART OF THE DRIVEWAY (EXCLUDING THE TRANSITION) THE EDGE OF ROADWAY PAVEMENT AND THE R/W LINE IS CLOSER THAN 5' FROM A SIDE LOT LINE EXTENDED.

DRIVEWAY DIMENSIONS

LOT SIZE	DOUBLE DRIVE MINIMUM	SINGLE DRIVE (CIRCULAR DRIVE INCL.)	
		MAXIMUN	MINIMUM
50–60	16	NONE	NONE
61–70	16	10	10
71–75	16	11	10
76–80	16	12	10
81–85	16	13	10
86–90	18	14	10
91–95	19	15	10
96–100	20	16	10
101–105	22	17	10
106–110	22	18	10

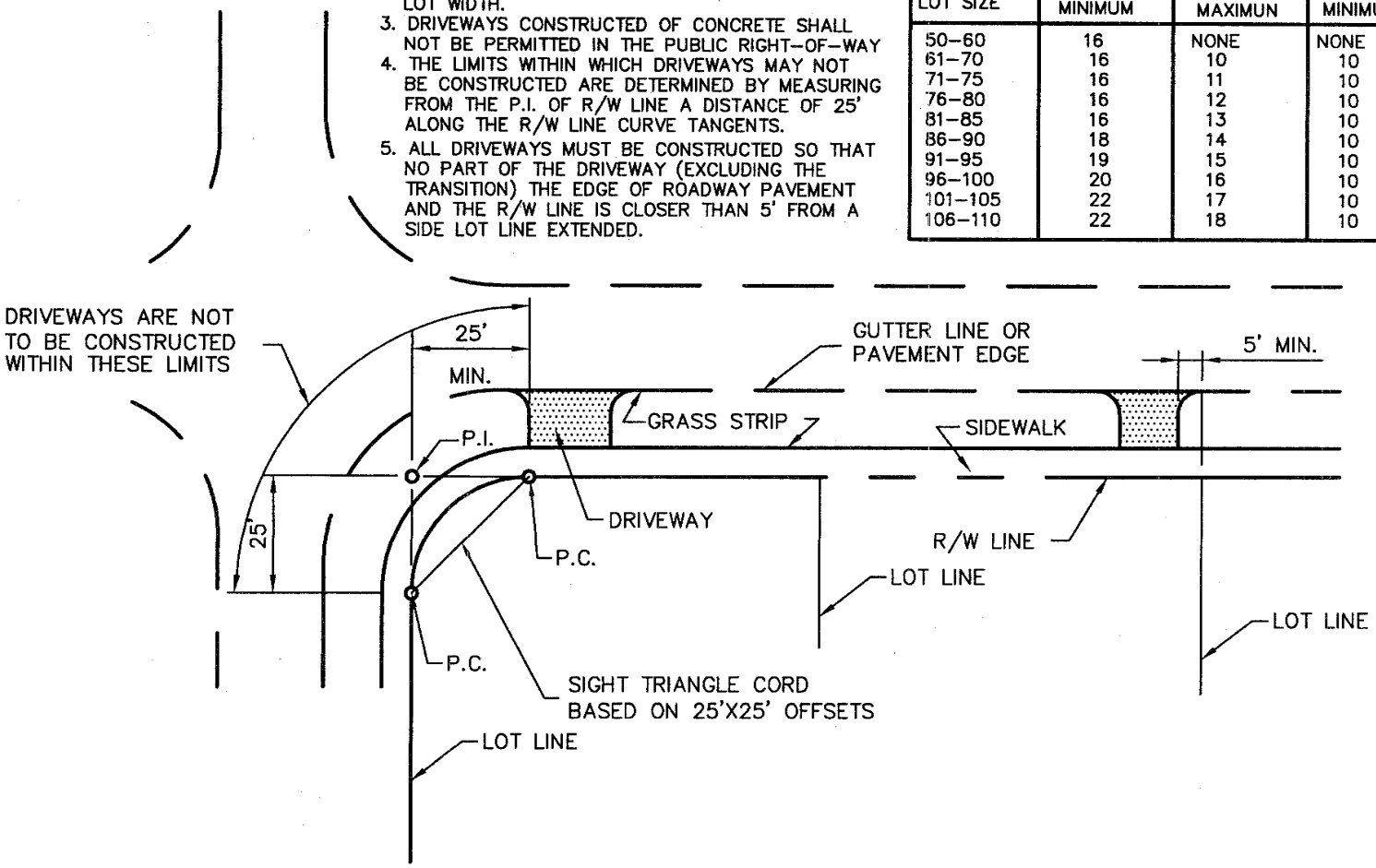

*** AT MAJOR INTERSECTIONS THE SIGHT TRIANGLE CORD SHALL BE BASED ON 40'X40' OFFSETS

TOWN OF DAVIE STANDARD PAVING AND DRAINAGE DETAILS AND NOTES

RESIDENTIAL DRIVEWAY SPACING & DIMENSIONS

N.T.S.

ISSUE DATE: _____

REVISED: _____

R-10

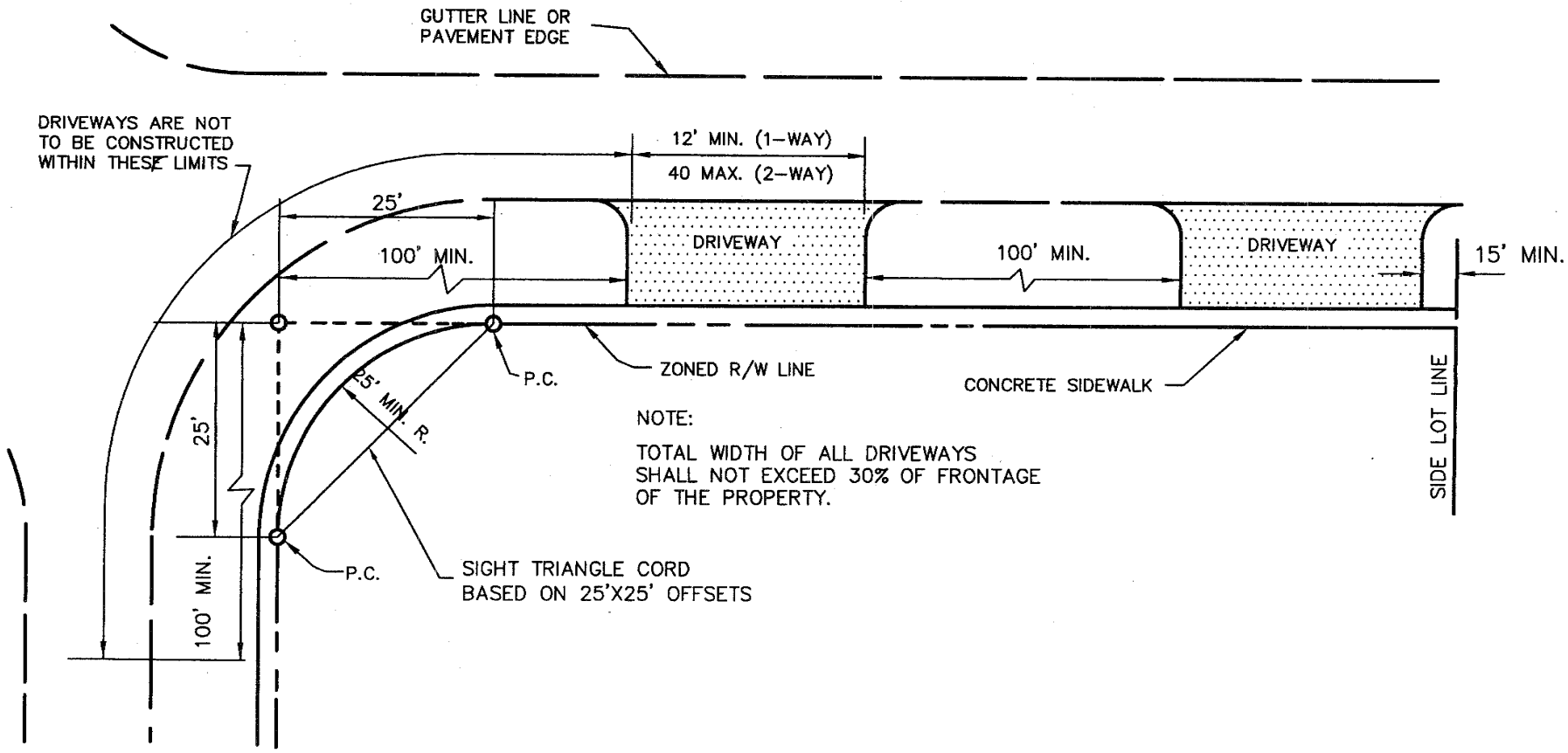

NOTE:

TOTAL WIDTH OF ALL DRIVEWAYS
SHALL NOT EXCEED 30% OF FRONTAGE
OF THE PROPERTY.

*** AT MAJOR INTERSECTIONS THE SIGHT TRIANGLE CHORD
SHALL BE BASED ON 40'X40' OFFSETS

TOWN OF DAVIE FLORIDA	TOWN OF DAVIE STANDARD PAVING AND DRAINAGE DETAILS AND NOTES	COMMERCIAL & INDUSTRIAL DRIVEWAY SPACING N.T.S.	ISSUE DATE: _____ REVISED: _____	R-11

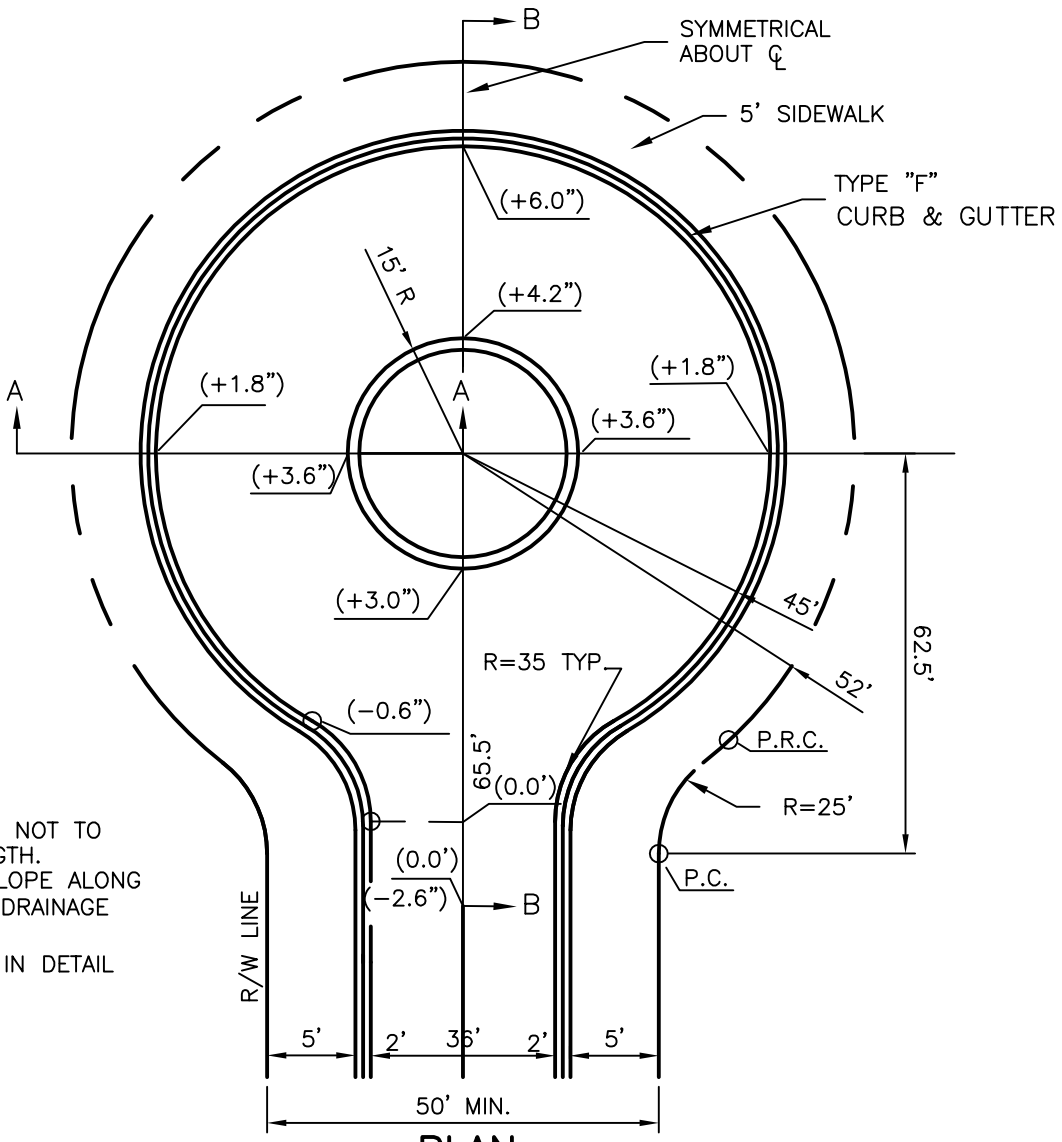

PLAN

NOTES:

1. CUL-DE-SAC STREETS NOT TO EXCEED 600' IN LENGTH.
2. MAINTAIN MIN. 0.3% SLOPE ALONG GUTTER FOR PROPER DRAINAGE (0.5% SHOWN).
3. SECTION B-B SHOWN IN DETAIL R-11

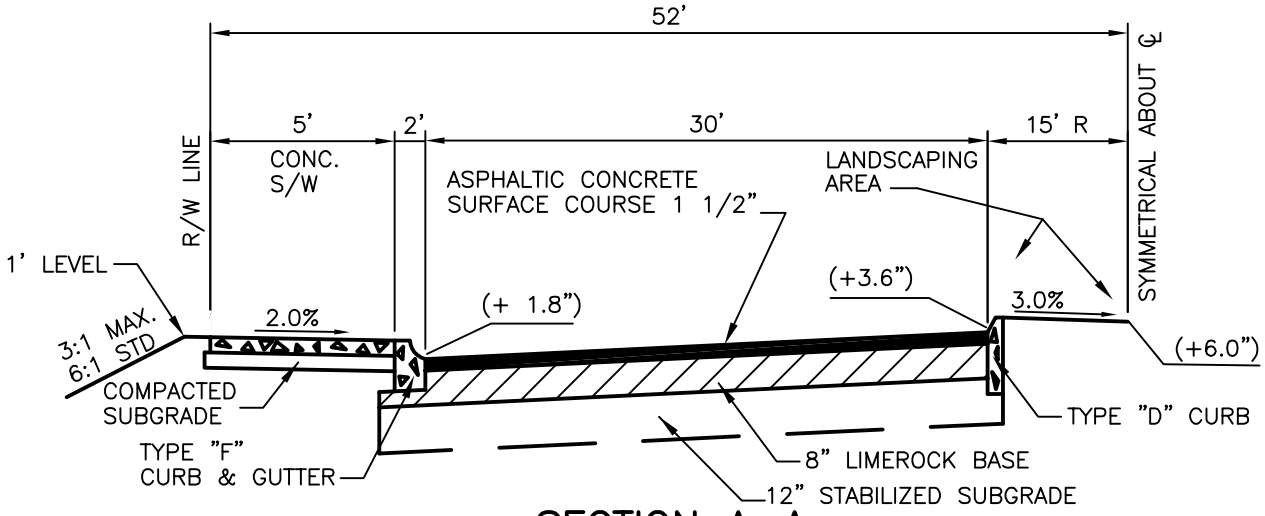

SECTION A-A

TOWN OF DAVIE FLORIDA	TOWN OF DAVIE STANDARD PAVING AND DRAINAGE DETAILS AND NOTES	CUL-DE-SAC (50' R/W) RESIDENTIAL N.T.S.	ISSUE DATE: _____ REVISED: _____	R-12

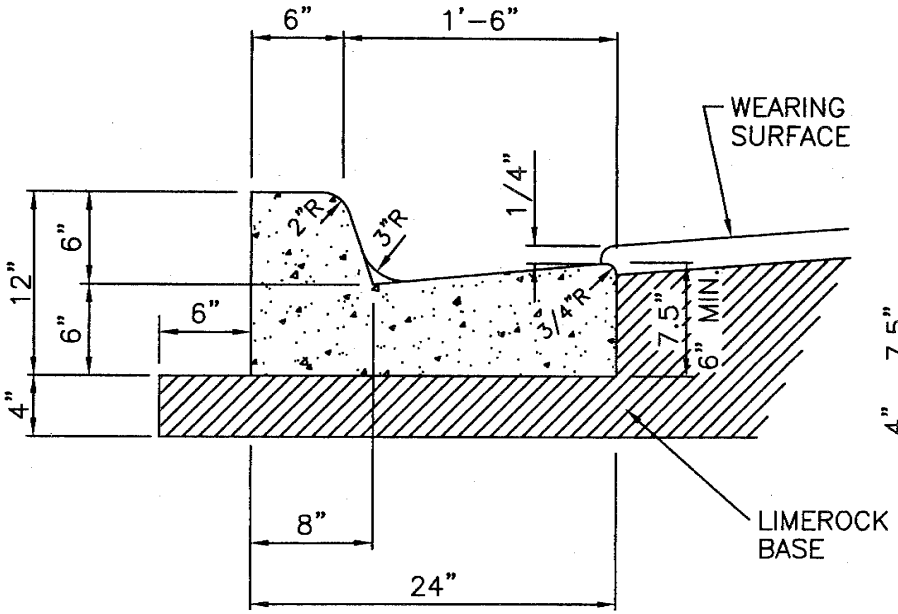

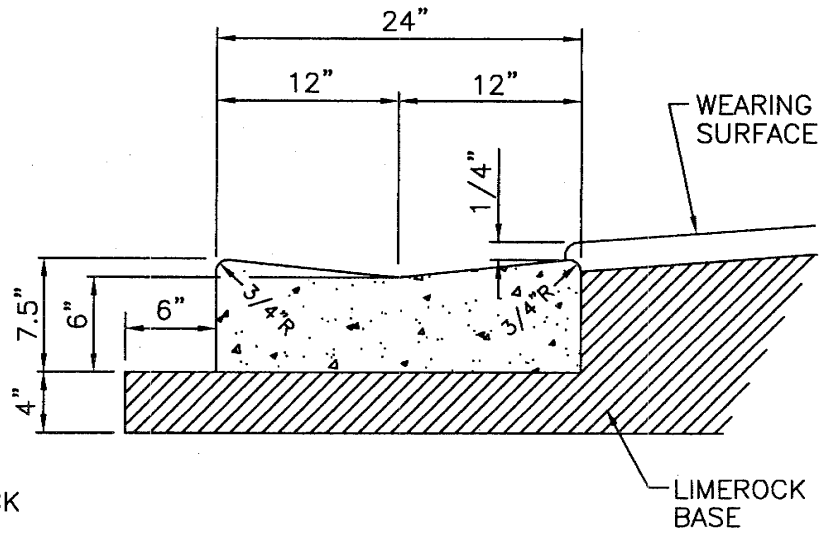

VALLEY GUTTER

NOTE:

1. WHEN USED ON HIGH SIDE OF ROADWAYS, CROSS SLOPE OF THE GUTTER SHALL MATCH THE CROSS SLOPE OF THE ADJACENT PAVEMENT AND THE THICKNESS OF THE LIP SHALL BE 6".
2. SAWCUTS REQUIRED AT 10' CENTERS.

TYPE 'F' CURB & GUTTER DETAIL

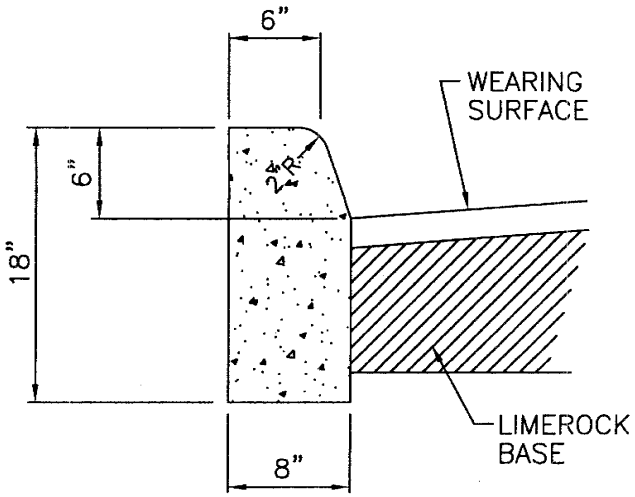

TYPE 'D' CURB

TOWN OF DAVIE FLORIDA	TOWN OF DAVIE STANDARD PAVING AND DRAINAGE DETAILS AND NOTES	CURB AND GUTTER TYPES N.T.S.	ISSUE DATE: _____ REVISED: _____	R-13

FTP–26

NOTE:

ALL LETTERS ARE 1.5" SERIES AT 1.5" SPACING.

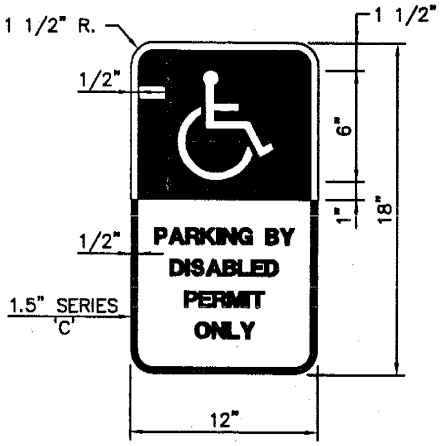

FTP–25

NOTE:

ALL LETTERS ARE 1" SERIES AT 1" SPACING.

NOTE:

1. TOP PORTION OF FTP 25 & 26 SHALL HAVE A REFLECTIVE BLUE BACKGROUND WITH WHITE REFLECTIVE SYMBOL AND BORDER.
2. BOTTOM PORTION SHALL HAVE A REFLECTIVE WHITE BACKGROUND WITH BLACK OPAQUE LEGEND AND BORDER.
3. FTP 25 & 26 MAY BE FABRICATED ON ONE PANEL OR TWO.
4. FTP 25 IS FOR USE IN AREAS WHERE SPACE IS LIMITED.

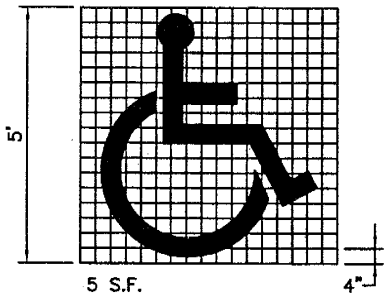

NOTE:

PROVIDE PAVEMENT SYMBOL IN HANDICAPPED PARKING SPACES. THE SYMBOL SHALL BE BLUE IN COLOR.

RE: FDOT INDEX NO. 17355

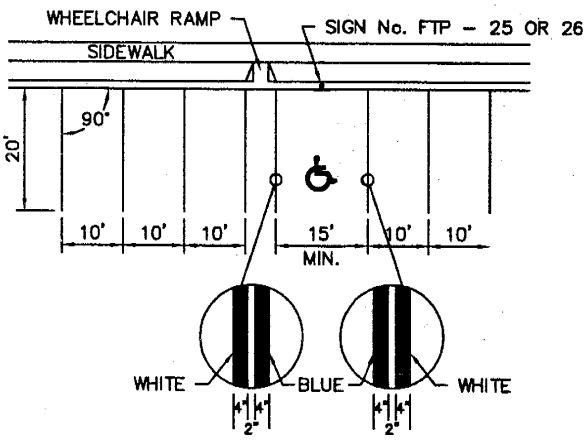

TOWN OF DAVIE FLORIDA	TOWN OF DAVIE STANDARD PAVING AND DRAINAGE DETAILS AND NOTES	HANDICAP PARKING DETAIL N.T.S.	ISSUE DATE: _____ REVISED: _____	R–14

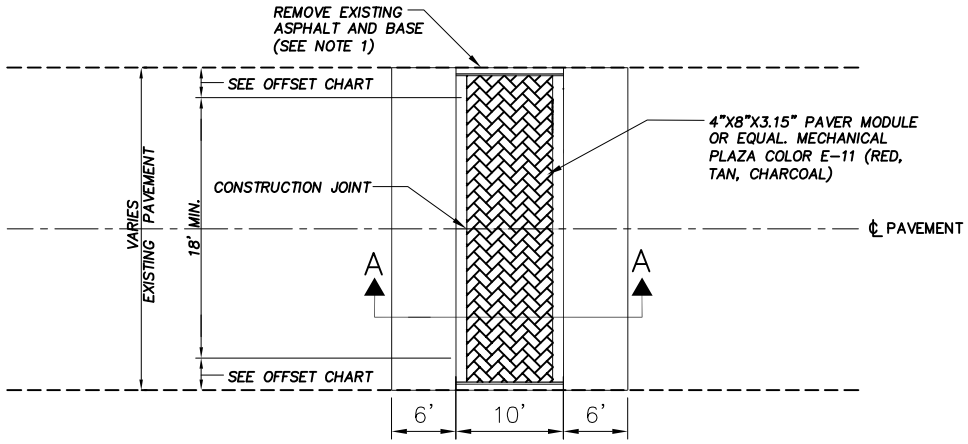

PLAN VIEW
N.T.S.

OFFSET CHART	
ROAD WIDTH (FT)	OFFSET (FT)
= > 24	3
23 : 22	2
< 22	0

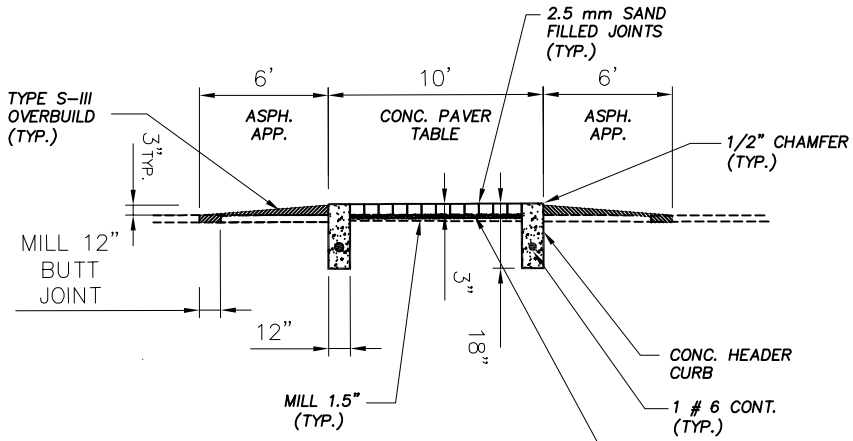

SECTION 'A-A'

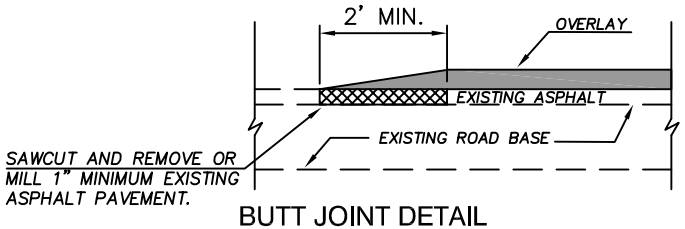

BUTT JOINT DETAIL
N.T.S.

TOWN OF DAVIE STANDARD SIGNING AND MARKING DETAILS AND NOTES

TRAFFIC CALMING SPEED HUMP

N.T.S.

ISSUE DATE: _____

REVISED: _____

R-15

Construction Notes

GOVERNING SPECIFICATIONS:

The State of Florida Department of Transportation Standard Specifications for Road and Bridge Construction, Dated 2007 and the Supplements and Special Provisions thereto. The 2000 edition applies for Asphaltic Cement.

Supplemental Details:

The State of Florida Department of Transportation Roadway and Traffic Standards for Design, Construction, Maintenance and Utility Operations on the State Highway System, Dated January 2006.

1. Asphalt pavement (2"–4" thick) and rock base (8"–10") thick shall be completely removed and properly disposed in an area outside of the project, subject to the approval of the Engineer. The subsequent void shall be back–filled to the original grade with clean fill and sodded. Any existing operative irrigation systems within 20 feet of the newly sodded area shall be adjusted/extended to provide coverage to the newly sodded area.

2. The Contractor shall take necessary steps, including but not limited to, the application and maintenance of a layer of bedding sand on the concrete pavers, of sufficient quantity to protect the pavers from any damage or stains that may result from the paving operations.

3. The concrete pavers shall be staggered per manufacturing specifications. Bedding sand shall be in accordance with ASTM C33 (1" average thickness). Concrete pavers shall be a minimum of 3.15" thick and shall conform to ASTM C936(6). Asphalt shall be Type S–III in accordance with Section 311 of the FDOT Specifications. Bases of payment for Asphalt shall be 120 lbs./s.y./in. Concrete for concrete header curb shall be 3,000 PSI minimum, in accordance with Section 400 of the FDOT Specifications.

4. Concrete Paver samples shall be submitted to the Engineer for review and approval.

5. Landscaping in swale areas shall be xeriscape and may include trees, shurbs and mulch. Existing irrigation system to be adjusted as needed. Pursuant to City Code Section 25–251, the owner and or occupant of the adjacent property shall maintain the abutting swale areas.

Maintenance of Traffic Notes

1. The Contractor is required to maintain pedestrian and vehicular traffic on this project. The Florida Department of Transportation Standard Index drawings Nos. 600 through 660 and the Manual of Uniform Traffic Control Devices and subsequent addendum and revisions shall set forth the minimum standards for the installation, maintenance and subsequent removal of all construction signs, detours, street closings, flashing arrow boards for lane drops, any temporary pavement, work zone pavement markings, barricades and warning lights as may be needed to maintain vehicle and pedestrian traffic.

2. The Contractor shall prepare and submit for review and approval, Maintenance of Traffic plan for each phase of construction in accordance with Section 102 of the FDOT specifications.

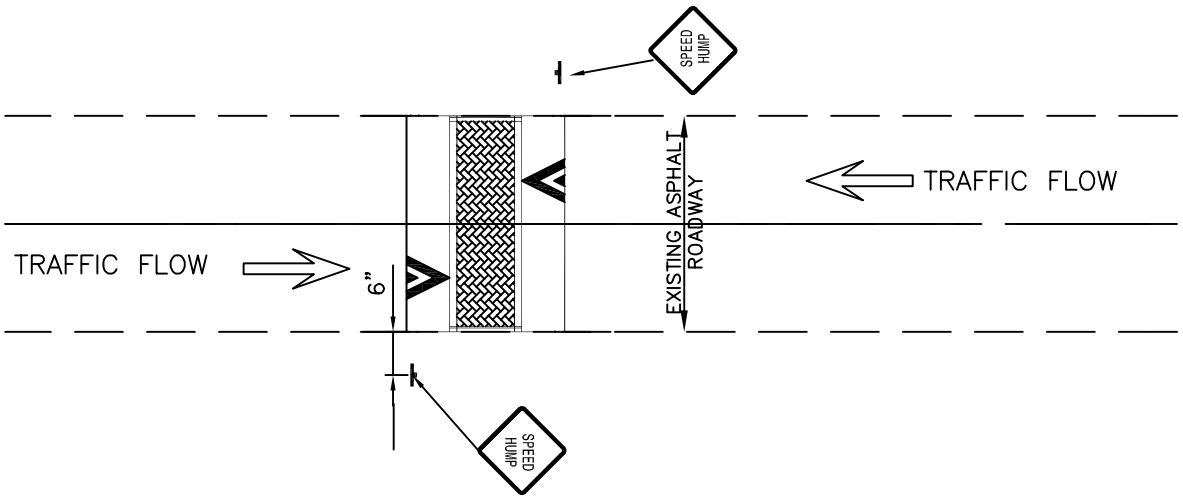

TYPICAL SIGN LOCATIONS

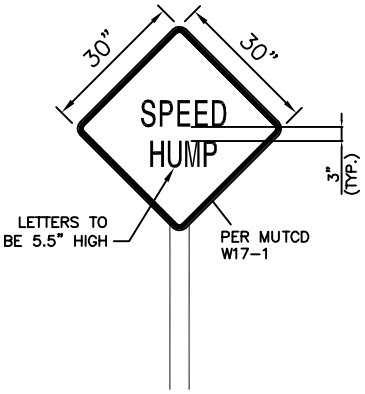

LOCATION SIGN

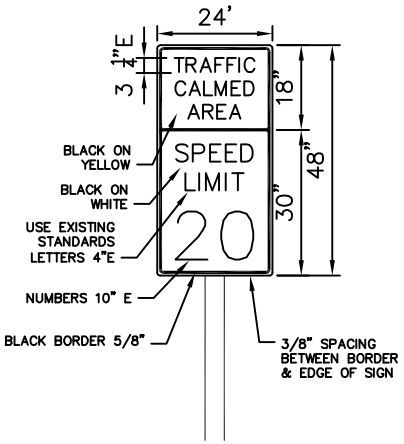

SPECIAL TRAFFIC CALMED AREA SIGNS

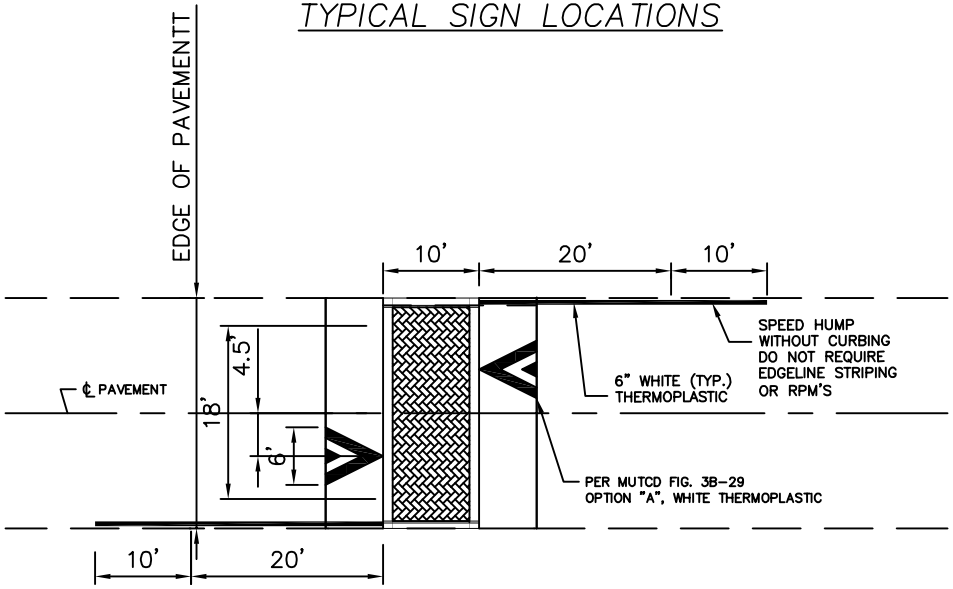

TYPICAL PAVEMENT MARKINGS PLAN

TYPICAL PAVEMENT MARKINGS PLAN

Signing and Pavement Marking Notes

1. Contractor to install reflective pavement markers in accordance with Broward County standards for pavement markings, signing & geometrics.
2. All permanent pavement markings shall be thermoplastic. In accordance with F.D.O.T. standards.
3. Warning flags on signs shall be used for the first 30 days of a new speed hump installed. All signs and any temporary markings shall be installed on the same day as the speed table. Signs may be installed earlier and covered if needed.
4. Use plural "Humps" on special advanced sign only if multiple speed humps installed. Otherwise use singular word "Hump".
5. Special Traffic Calmed Area sign to be used at every entrance to neighborhood area when comprehensive traffic calmed project is constructed. One advanced sign at the approach to a series of road humps spaced less than 1/4 mile apart only used if Traffic Calmed Area sign is not used.
6. The exact location of signs shall be as directed by the Town Engineer.
7. All signs shall be reflective.

TOWN OF DAVIE FLORIDA	TOWN OF DAVIE STANDARD PAVING AND DRAINAGE DETAILS AND NOTES	TRAFFIC CALMING STANDARD PAVEMENT MARKING AND SIGNAGE N.T.S.	ISSUE DATE: _____ REVISED: _____	R-17

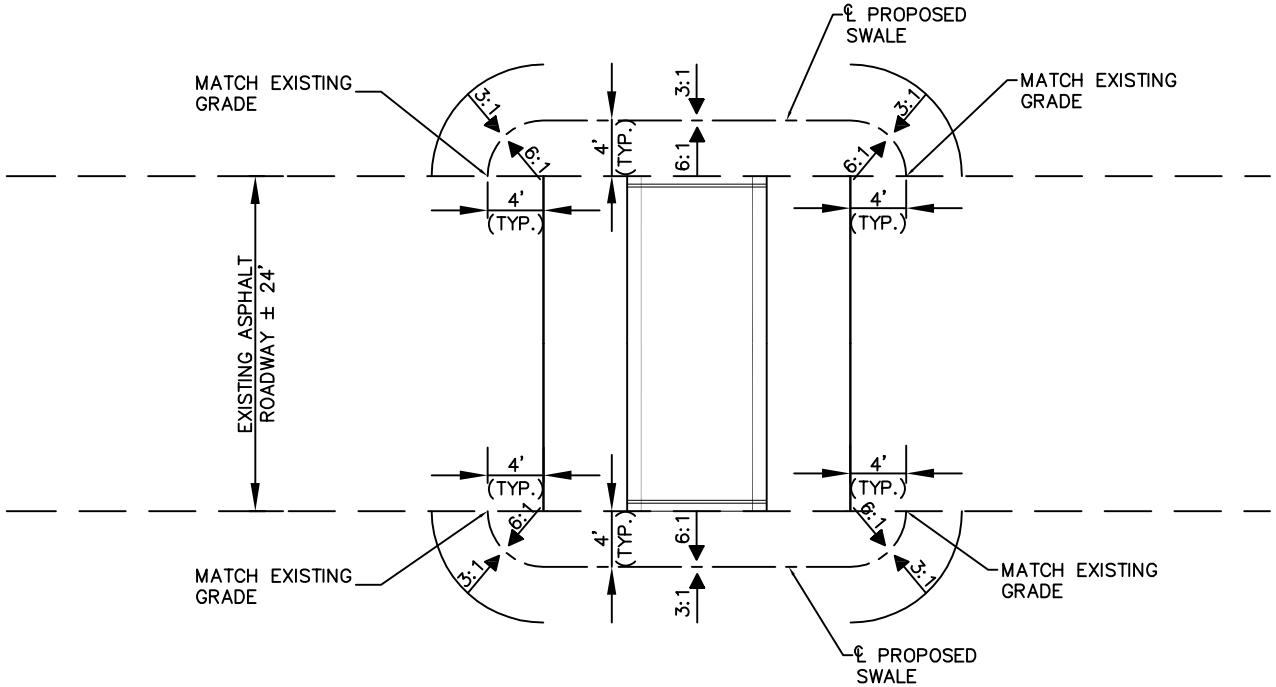

TYPICAL GRADING PLAN

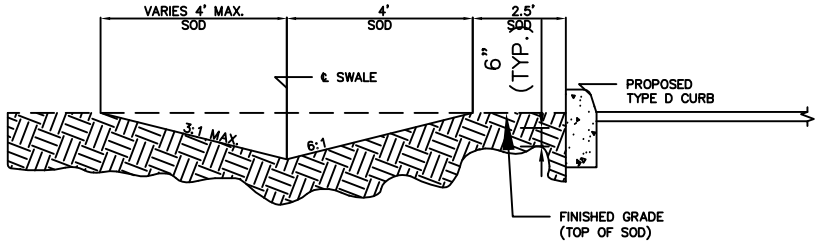

TYPICAL CROSS-SECTION

BACK OF CURB GRADING

Grading Notes

1. The exact location of backslopes, tie-in points and limits of construction shall be as directed by the Town Engineer.
2. Finish grades shall include the thickness of the sod.
3. All existing sodded areas disturbed during construction for grading shall be sodded with the type of sod found to be existing at the site.
4. Existing operative irrigation systems, as determined by the Engineer, within the limits of construction shall be adjusted to final grade using new irrigation materials as provided in the bid line items for irrigation pipe and spray heads.

TOWN OF DAVIE FLORIDA	TOWN OF DAVIE STANDARD PAVING AND DRAINAGE DETAILS AND NOTES	TRAFFIC CALMING GRADING DETAIL ENHANCED SPEED HUMP N.T.S.	ISSUE DATE: _____ REVISED: _____	R-18

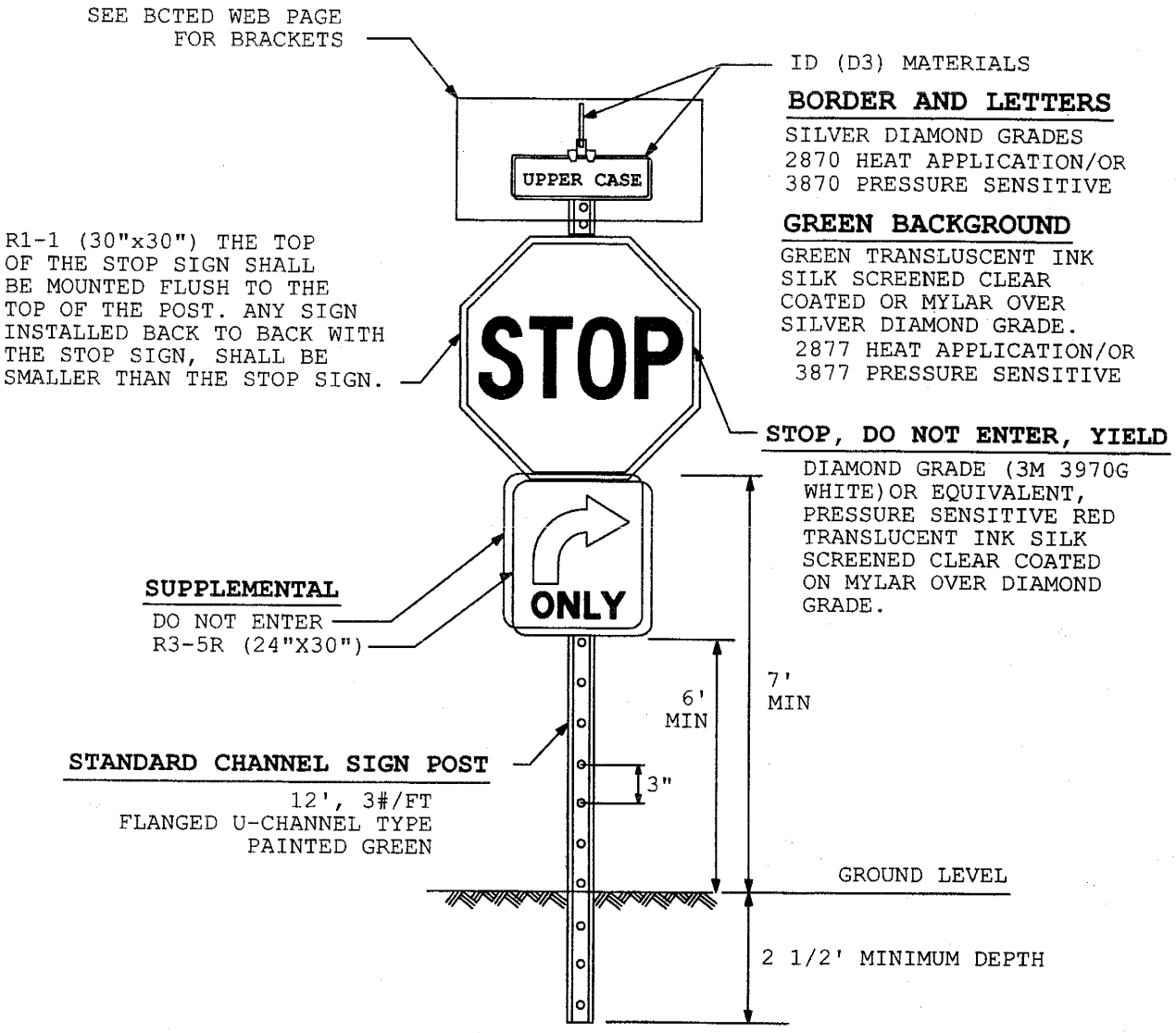

TOWN OF DAVIE STANDARD SIGNING AND MARKING DETAILS AND NOTES	STOP SIGN AND STREET IDENTIFICATION ASSEMBLY N.T.S.	ISSUE DATE: _____ REVISED: _____	R-19

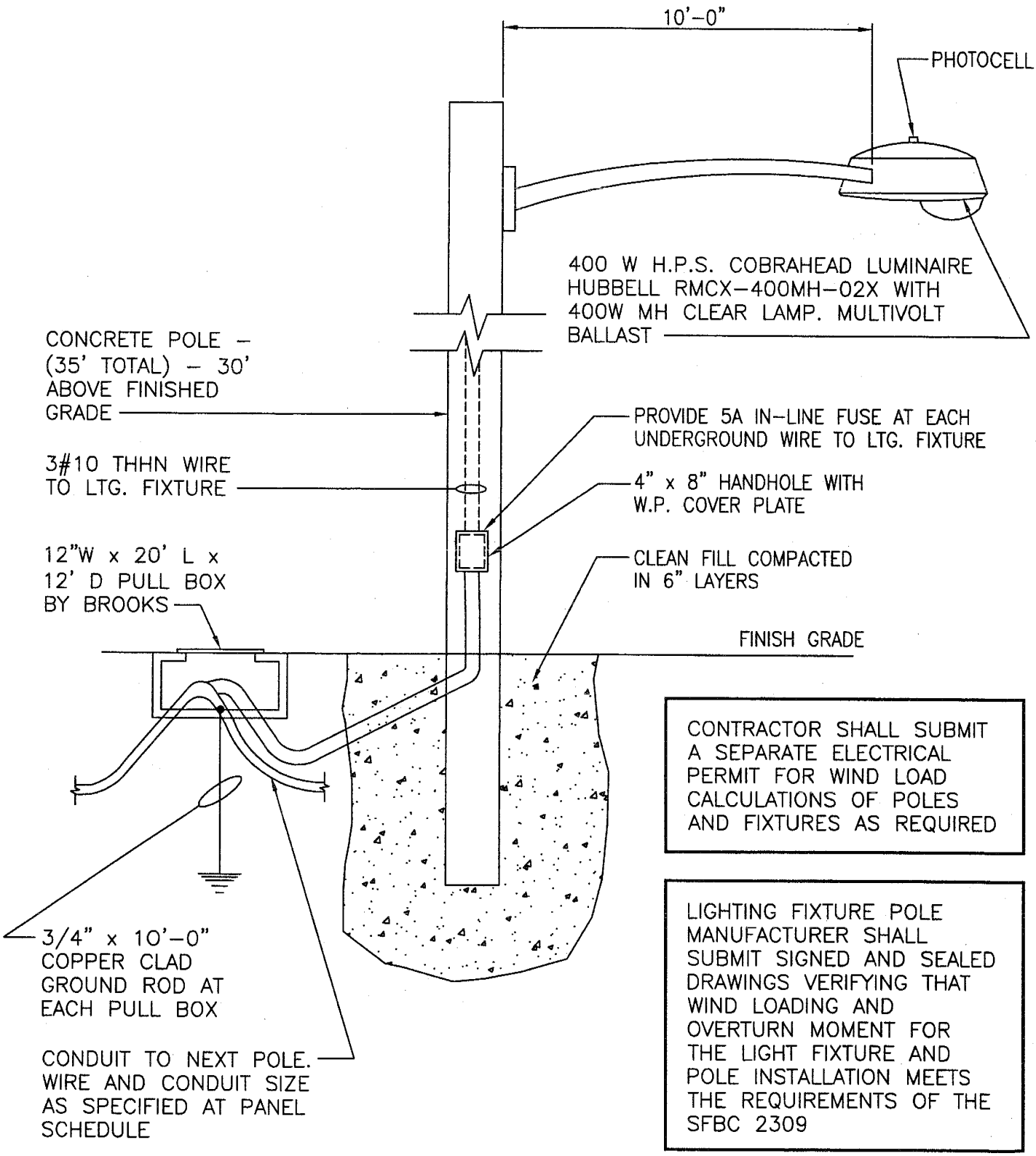

CONTRACTOR SHALL SUBMIT A SEPARATE ELECTRICAL PERMIT FOR WIND LOAD CALCULATIONS OF POLES AND FIXTURES AS REQUIRED

LIGHTING FIXTURE POLE MANUFACTURER SHALL SUBMIT SIGNED AND SEALED DRAWINGS VERIFYING THAT WIND LOADING AND OVERTURN MOMENT FOR THE LIGHT FIXTURE AND POLE INSTALLATION MEETS THE REQUIREMENTS OF THE SFBC 2309

TOWN OF DAVIE FLORIDA	TOWN OF DAVIE STANDARD PAVING AND DRAINAGE DETAILS AND NOTES	CONCRETE POLE MOUNTING DETAIL N.T.S.	ISSUE DATE: _____ REVISED: _____	R-20

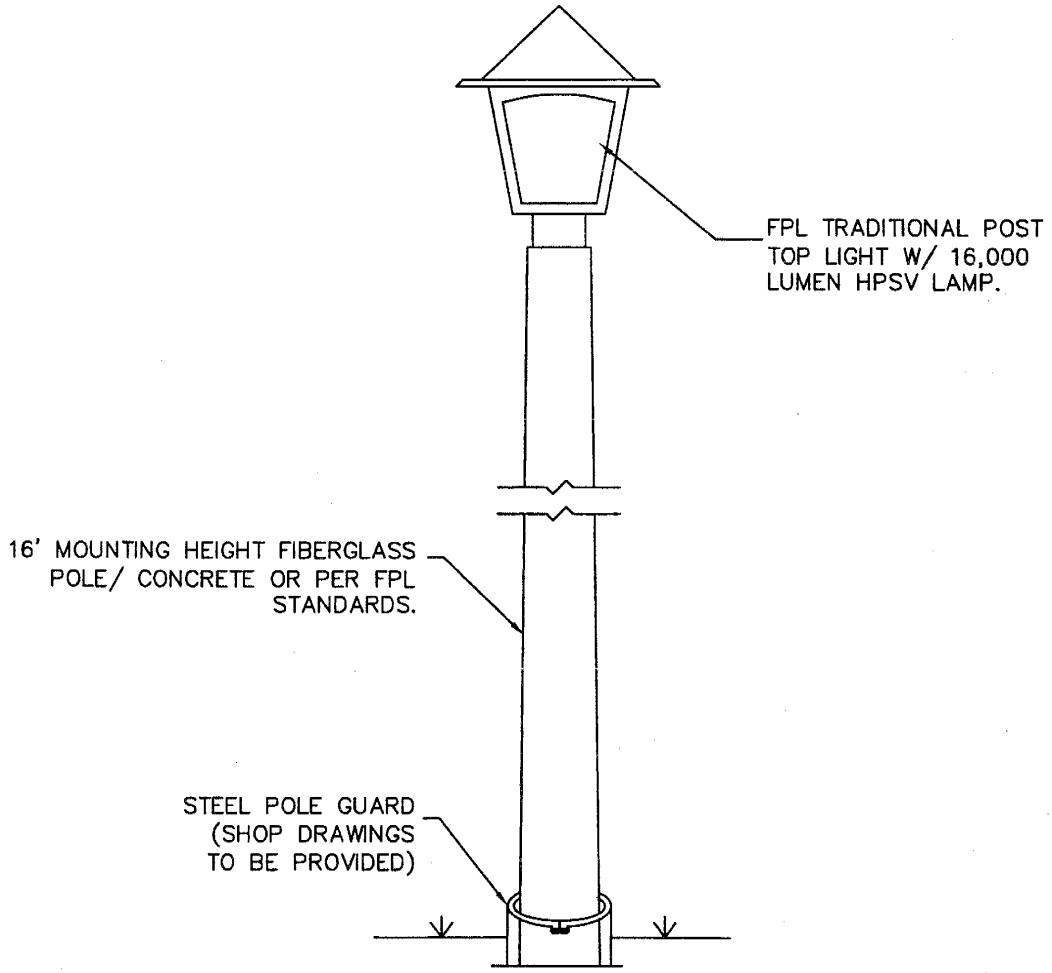

NOTE:

1. STREET LIGHTS TO BE PROVIDED BY FPL THROUGH PRIVATE STREET LIGHT AGREEMENT WITH DEVELOPER. STREET LIGHT SPACING AND COVERAGE TO BE DETERMINED BY FPL ENGINEERING DEPARTMENT.
2. ANY STREET LIGHT LOCATIONS WITHIN DRAINAGE EASEMENT TO BE FIELD ADJUSTED OUT OF EASEMENT.

TOWN OF DAVIE	TOWN OF DAVIE STANDARD PAVING AND DRAINAGE DETAILS AND NOTES	FIBERGLASS POLE WITH POLE GUARD N.T.S.	ISSUE DATE: _____ REVISED: _____	R-21

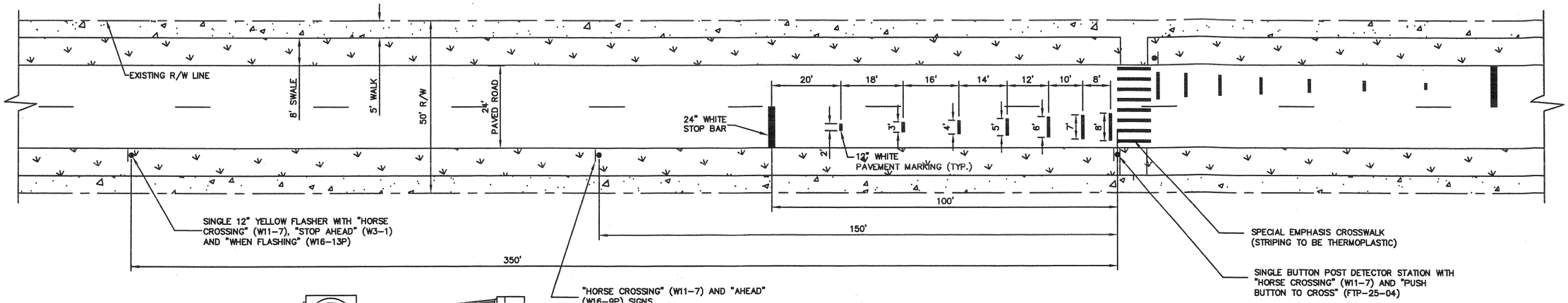

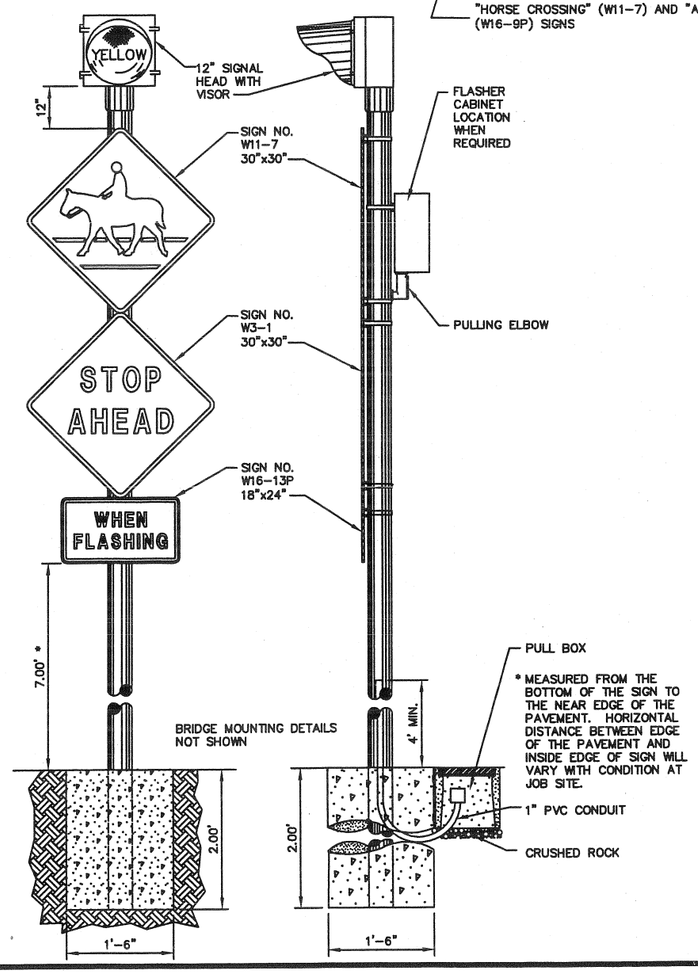

NOTES:

1. ALL PAVEMENT MARKINGS SHALL BE THERMOPLASTIC UNLESS OTHERWISE NOTED.
2. ALL SIGNAGE SHALL BE HIGH INTENSITY.
3. ALL PAVEMENT MARKINGS AND SIGNAGE SHALL BE IN ACCORDANCE WITH THE "MANUAL OF UNIFORM TRAFFIC CONTROL DEVICES FOR STREETS AND HIGHWAYS", LATEST EDITION.
4. A THOROUGH ON-SITE ANALYSIS OF ROADWAY GEOMETRICS SHOULD BE PERFORMED TO ENSURE THAT SPEED HUMPS WILL NOT BE INTRODUCED AT A CRITICAL POINT IN THE ROADWAY SYSTEM.
5. SPEED HUMPS SHOULD NOT BE INSTALLED WITHIN 250 FT. OF A TRAFFIC SIGNAL OR WITHIN AN INTERSECTION OR DRIVEWAY.
6. MIN. DISTANCE BETWEEN SPEED HUMPS IS 800'.
7. IT IS RECOMMENDED THAT A TEMPLATE BE CONSTRUCTED TO VERIFY THE ACCURACY OF THE HUMP PROFILE AND TO ENSURE THAT THE DESIRED VERTICAL DIMENSIONS ARE ATTAINED.

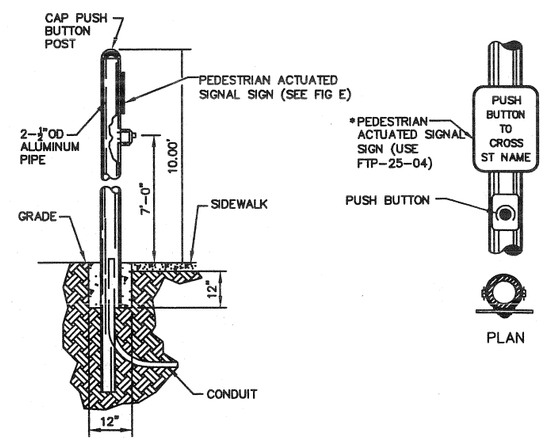

POST DETECTOR STATION

NOTES:
(APPLY TO ALL DETAILS)

1. ALL PAVEMENT MARKINGS SHALL BE THERMOPLASTIC UNLESS OTHERWISE NOTED.
2. ALL SIGNAGE SHALL BE HIGH INTENSITY.
3. ALL PAVEMENT MARKINGS AND SIGNAGE SHALL BE IN ACCORDANCE WITH THE "MANUAL OF UNIFORM TRAFFIC CONTROL DEVICES FOR STREETS AND HIGHWAYS", LATEST EDITION.

TOWN OF DAVIE
STANDARD PAVING
AND DRAINAGE
DETAILS AND NOTES

TYPICAL
TWO LANE LOCAL ROADWAY
HIGH VOLUME/HIGH SPEED HORSE CROSSING
(1 OF 3)
N.T.S.

ISSUE DATE:
REVISED:

R-22

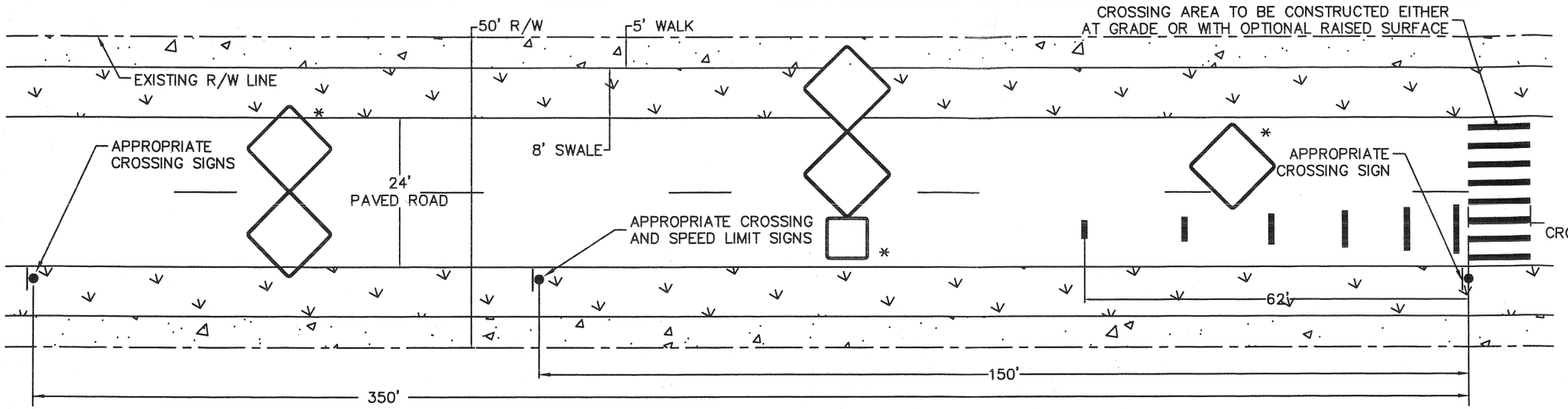

TWO LANE LOCAL ROADWAY LOW VOLUME / LOW SPEED CROSSING

NOTES: (APPLY TO BOTH DETAILS)

1. ALL PAVEMENT MARKINGS SHALL BE THERMOPLASTIC UNLESS OTHERWISE NOTED.
2. ALL SIGNAGE SHALL BE HIGH DENSITY
3. ALL PAVEMENT MARKINGS AND SIGNAGE SHALL BE IN ACCORDANCE WITH THE "MANUAL OF UNIFORM TRAFFIC CONTROL DEVICES FOR STREETS AND HIGHWAYS", LATEST EDITION.

*ALL SIGNING AND MARKING SHALL BE SUBJECT TO BROWARD COUNTY TRAFFIC ENGINEERING DIVISION APPROVAL.

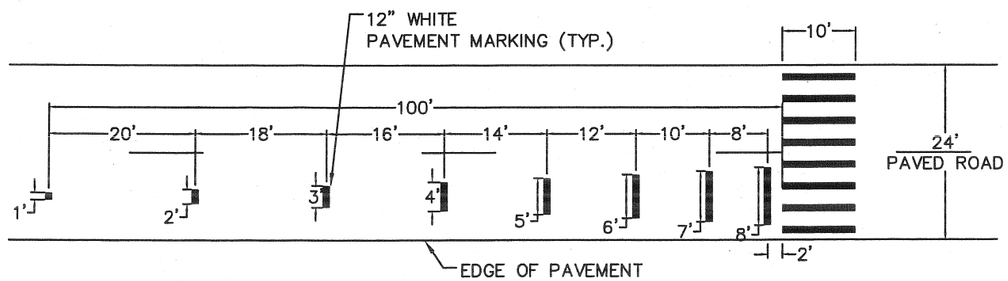

ADVANCE WARNING MARKINGS HIGH VOLUME / HIGH SPEED

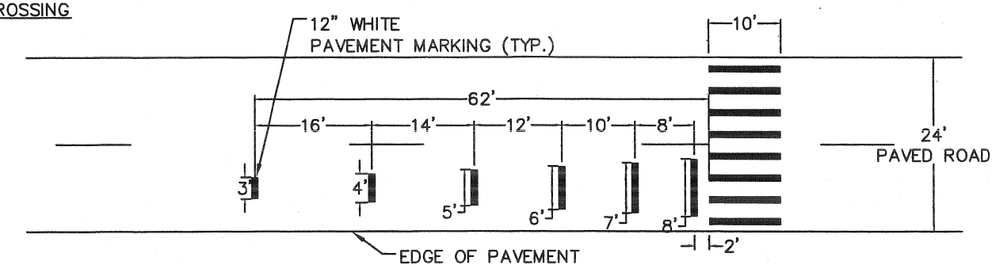

ADVANCE WARNING MARKINGS LOW VOLUME / LOW SPEED

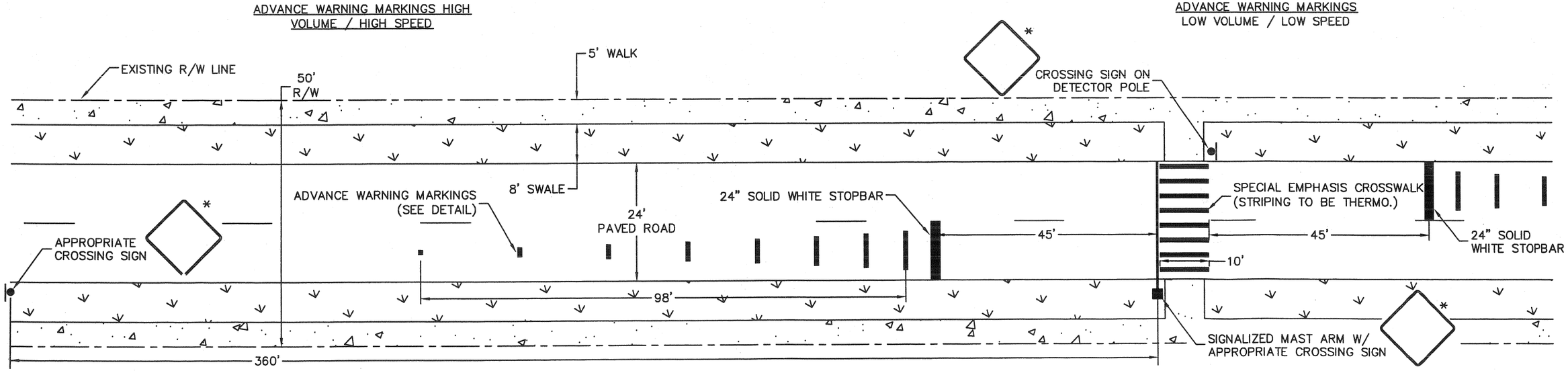

TOWN OF DAVIE STANDARD PAVING AND DRAINAGE DETAILS AND NOTES

TYPICAL TWO LANE HORSE CROSSING (2 OF 3)

N.T.S.

ISSUE DATE: _____

REVISED: _____

R-22

NOTES:

1. ALL PAVEMENT MARKINGS SHALL BE THERMOPLASTIC UNLESS OTHERWISE NOTED.
2. ALL SIGNAGE SHALL BE HIGH DENSITY
3. ALL PAVEMENT MARKINGS AND SIGNAGE SHALL BE IN ACCORDANCE WITH THE "MANUAL OF UNIFORM TRAFFIC CONTROL DEVICES FOR STREETS AND HIGHWAYS", LATEST EDITION.

*ALL SIGNING AND MARKING SHALL BE SUBJECT TO BROWARD COUNTY TRAFFIC ENGINEERING DIVISION APPROVAL.

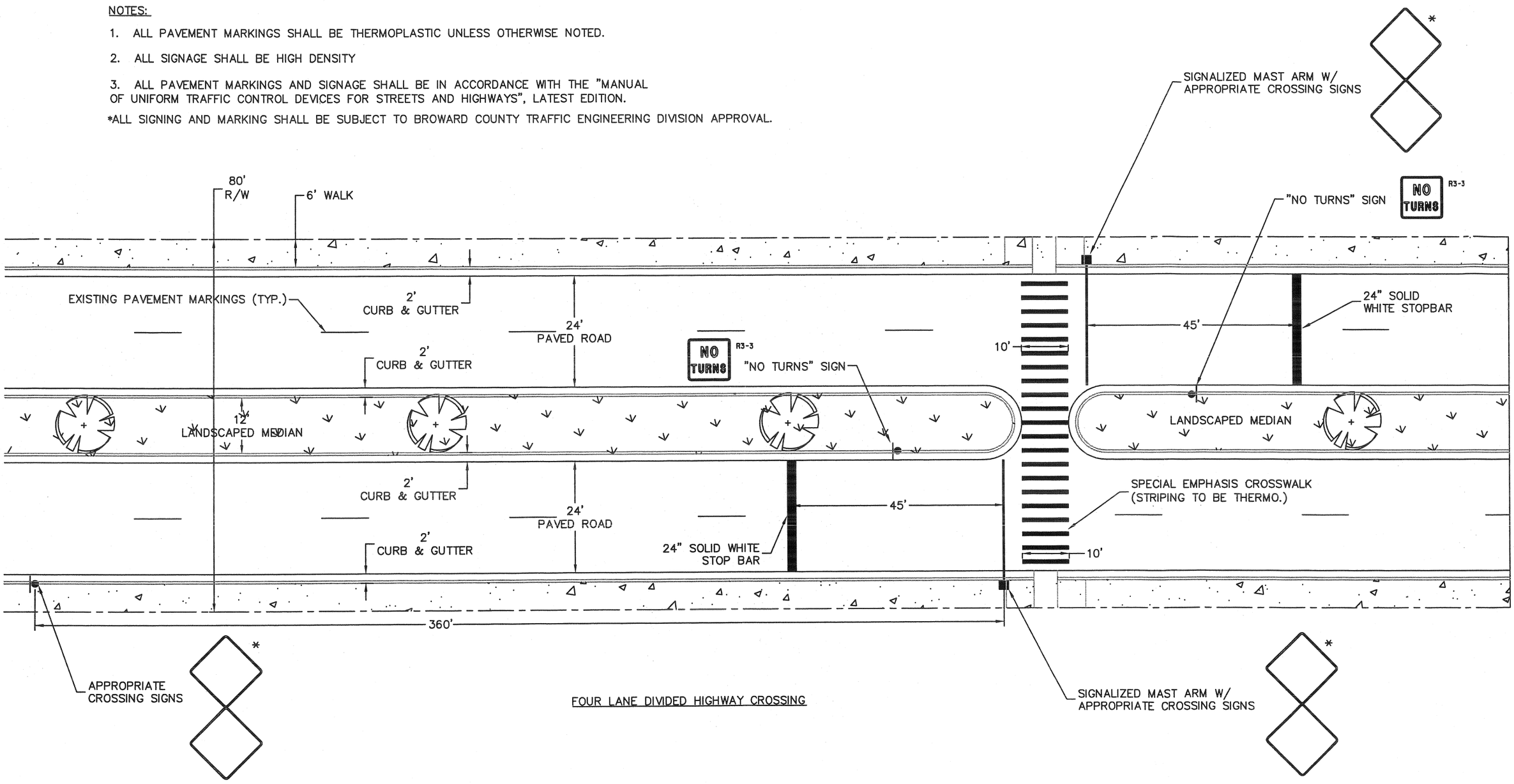

FOUR LANE DIVIDED HIGHWAY CROSSING

TOWN OF DAVIE STANDARD PAVING AND DRAINAGE DETAILS AND NOTES	TYPICAL TWO LANE HORSE CROSSING (3 OF 3) N.T.S.	ISSUE DATE: _____ REVISED: _____	R-22

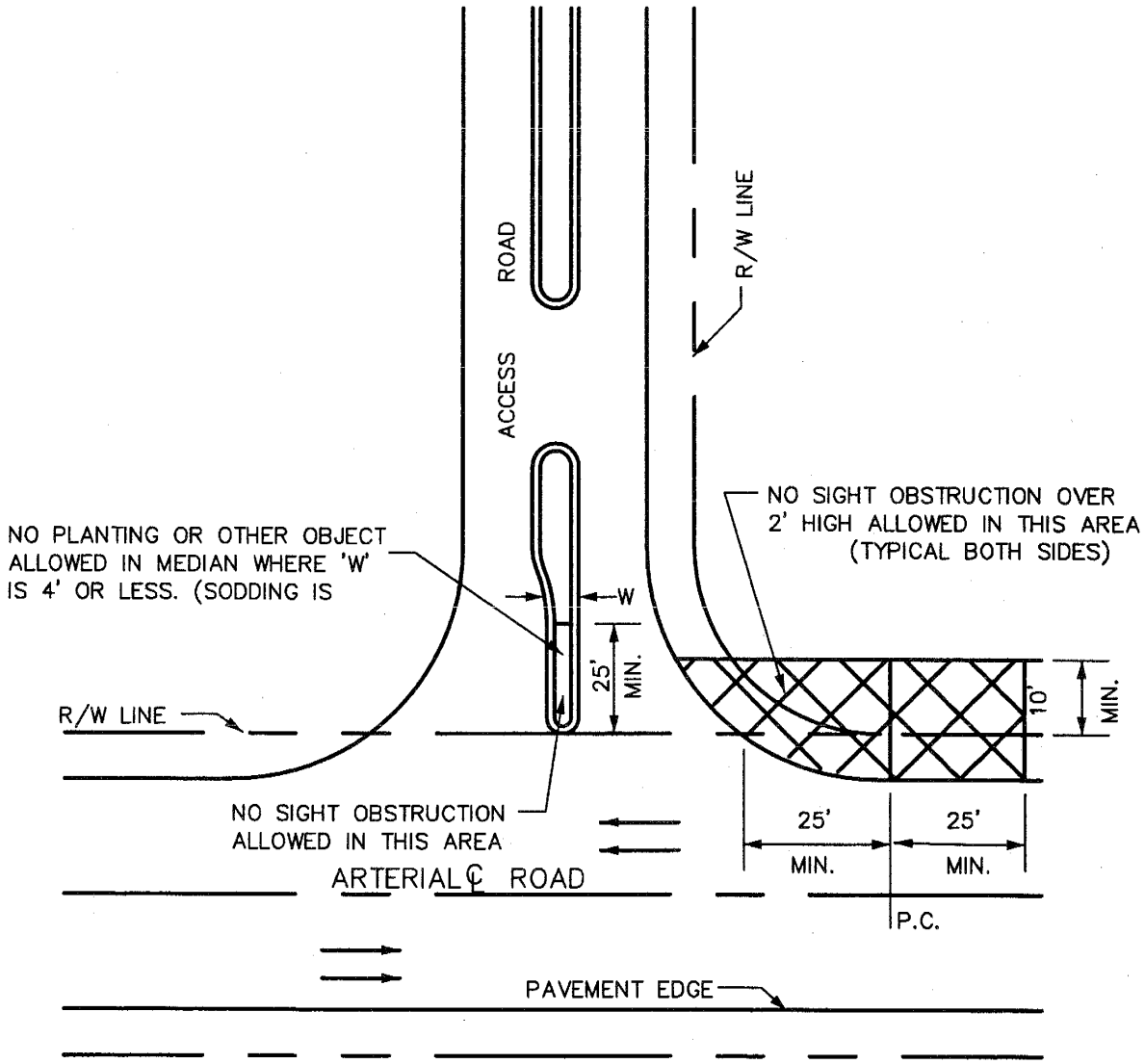

PLAN

RE.: D.C.W.D. DETAIL G 5.1

TOWN OF DAVIE FLORIDA	TOWN OF DAVIE STANDARD PAVING AND DRAINAGE DETAILS AND NOTES	SIGHT RESTRICTIONS FOR ACCESS TO ARTERIAL ROAD N.T.S.	ISSUE DATE: _____ REVISED: _____	R-23

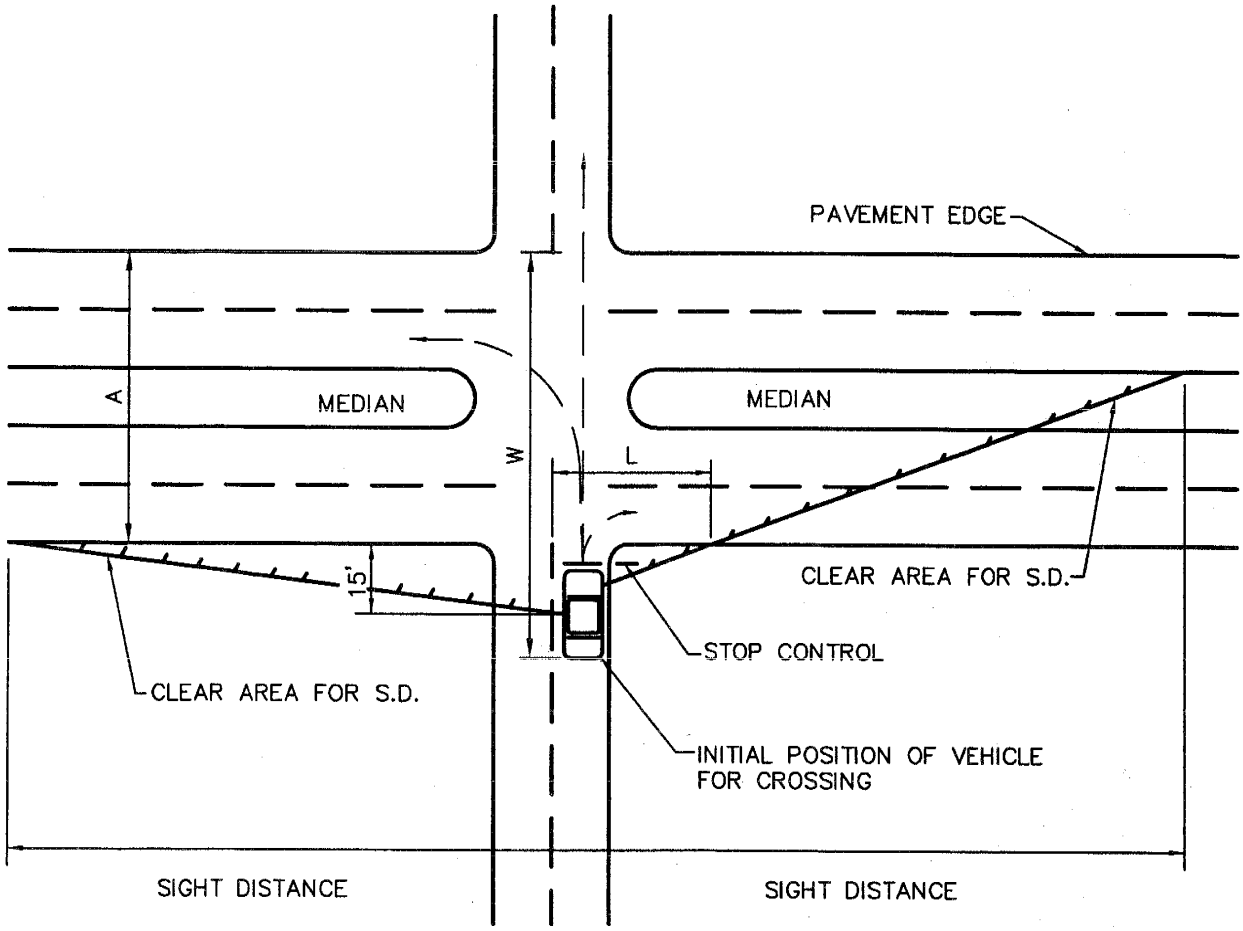

DESIGN SPEED 30 MPH

NOTE:

USE THE DETAIL FOR LOCAL ROADS ONLY FOR OTHER ROAD CLASSIFICATIONS REFER TO FIGURES 111-11 AND 111-12 OF THE F.D.O.T. MANUAL OR UNIFORM STANDARDS FOR DESIGN CONSTRUCTION AND MAINTENACE OF STREETS AND HIGHWAYS (GREEN BOOK).

	A	W	SD	L
2 LANES	24	50'	366'	141'
4 LANES	48	65'	415'	160'

RE.: F.D.O.T. MANUAL OF UNIFORM STANDARDS FIG. 111-12

TOWN OF DAVIE	TOWN OF DAVIE STANDARD PAVING AND DRAINAGE DETAILS AND NOTES	INTERSECTION SIGHT DISTANCE (LOCAL ROADS) N.T.S.	ISSUE DATE: _____ REVISED: _____	R-24

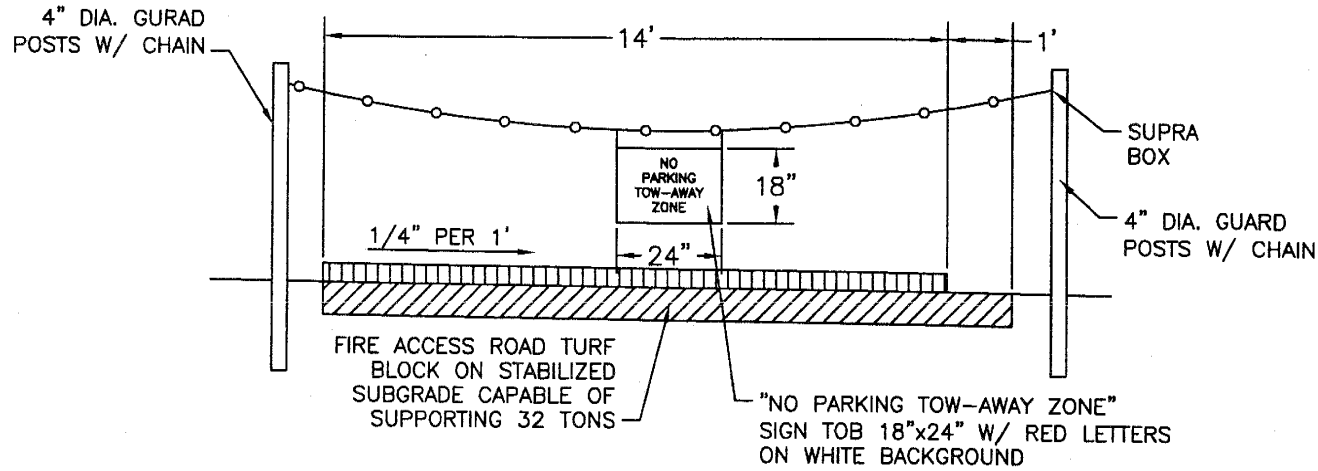

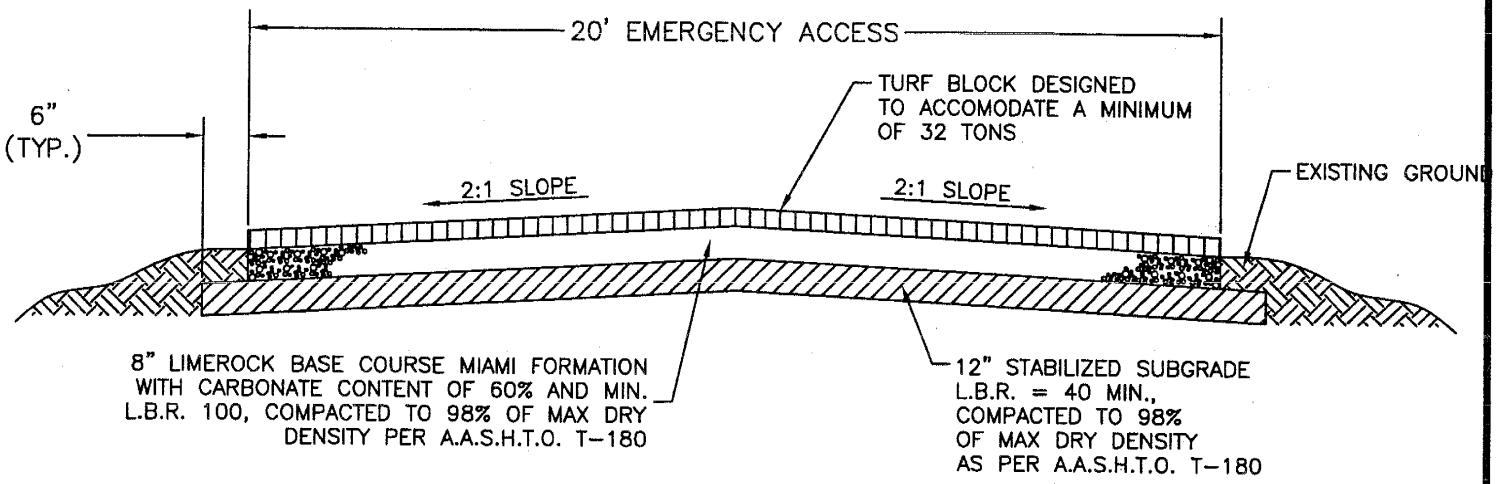

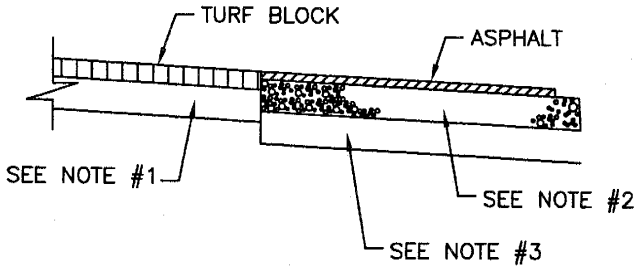

NOTES:

1. 12" STABILIZED SUBGRADE MIN. LBR 40 COMPACTED TO 98% A.A.S.H.T.O. T-180 CAPABLE OF SUPPORTING 32 TONS.

2. THE BASE COURSE SHALL BE LIMEROCK (70% CALCIUM), 8" THICK COMPACTED IN ACCORDANCE WITH A.A.S.H.T.O. SPECIFICATION T-180 TO 98% DENSITY.

3. ALL ORGANIC AND YIELDING MATERIAL WITHIN THE LIMITS SHOWN SHALL BE REMOVED AND REPLACED WITH CLEAN FILL, THE SUBBASE SHALL EXTEND 12" BELOW THE BASE COURSE, SHALL HAVE A MINIMUM DRY DENSITY OF 115 PCF AND SHALL BE COMPACTED TO 98% OF MAXIMUM DRY DENSITY PER A.A.S.H.T.O. SPECIFICATION T-180, METHOD "C". MINIMUM LBR TO BE 40.

TOWN OF DAVIE FLORIDA	TOWN OF DAVIE STANDARD PAVING AND DRAINAGE DETAILS AND NOTES	EMERGENCY ACCESS ROAD DETAIL N.T.S.	ISSUE DATE: _____ REVISED: _____	R-25