Approved Washing Machine Riser

With Sink

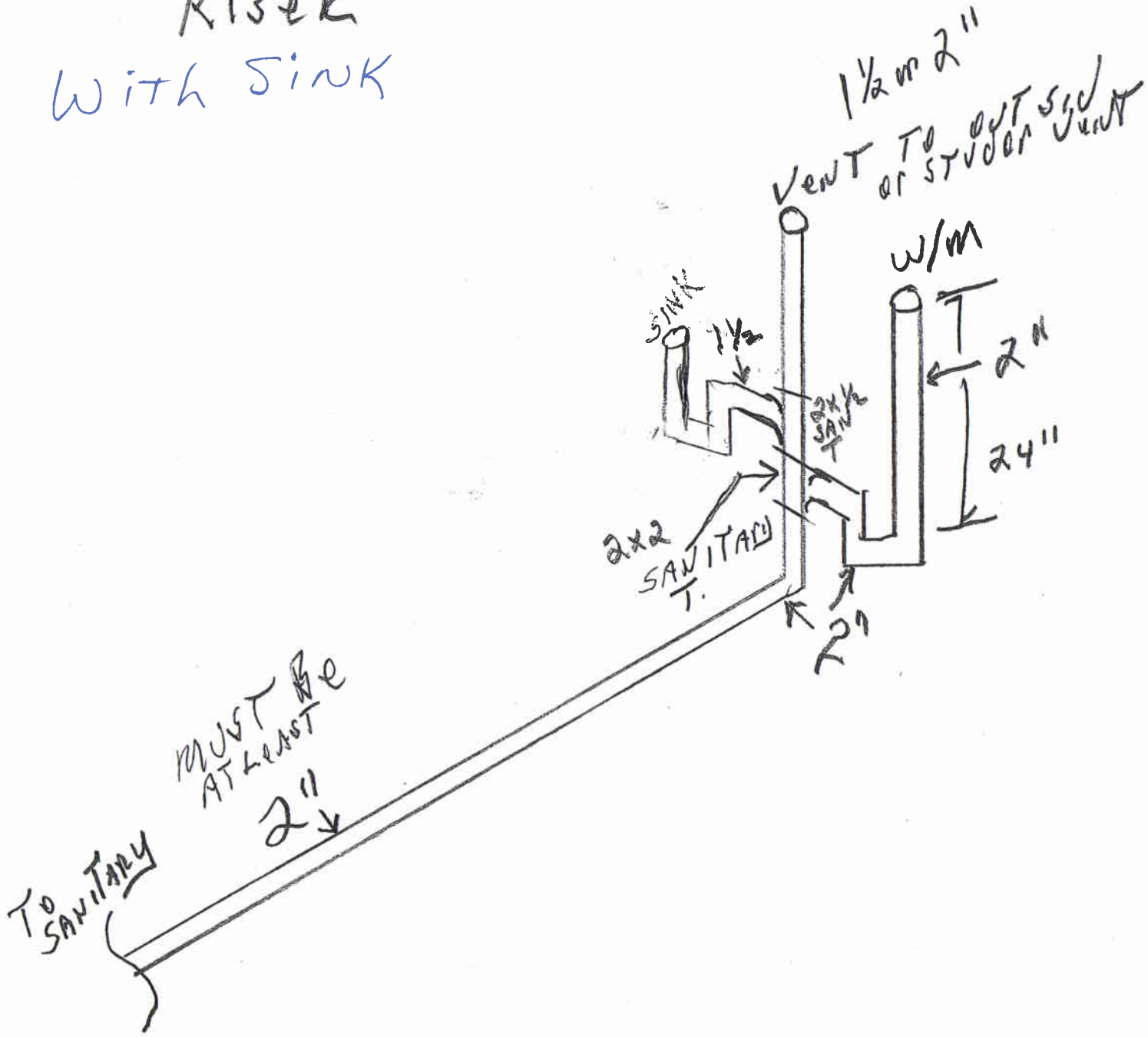
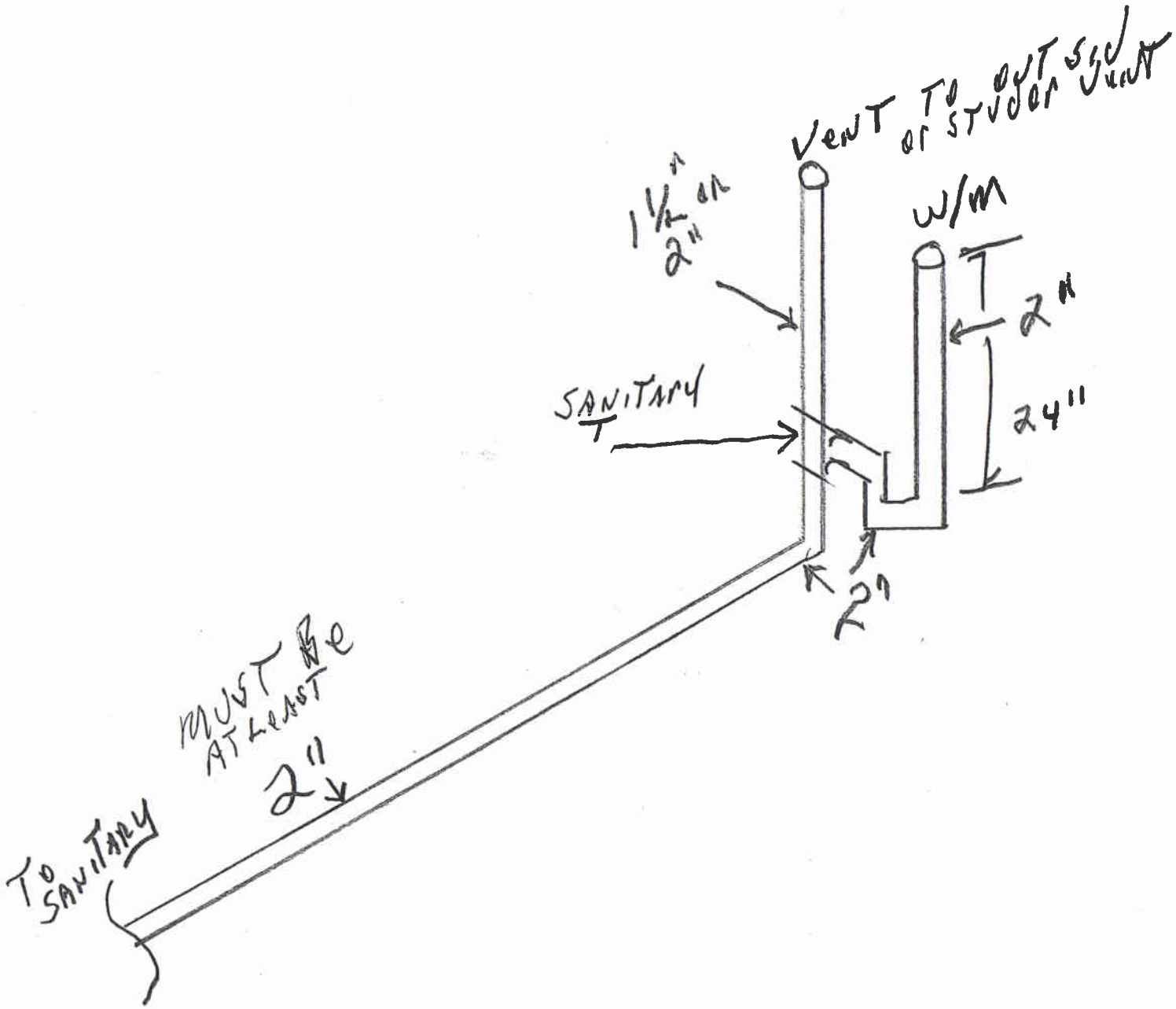
Approved Washing Machine Riser