TOWN OF DAVIE
TOWN COUNCIL AGENDA REPORT

TO: Mayor and Council Members
FROM/PHONE: Cheryl Dolin, Project Manager, Capital Projects, (954)797-1191
SUBJECT: Ordinance
Project Name and Location:
Oakes Road Fire Rescue Station, 4491 Oakes Road, Davie, FL 33314
AFFECTED DISTRICT: District 1

TITLE OF AGENDA ITEM:
AN ORDINANCE OF THE TOWN OF DAVIE, FLORIDA, AUTHORIZING THE APPROPRIATE TOWN OFFICIALS TO EXECUTE A UTILITY EASEMENT TO FLORIDA POWER AND LIGHT FOR THE "OAKES ROAD FIRE RESCUE STATION" PROJECT; PROVIDING FOR SEVERABILITY AND PROVIDING FOR AN EFFECTIVE DATE.

REPORT IN BRIEF:
The Town is in need of electrical service for the new Oakes Road Fire Rescue Station. The Florida Power and Light Company requires that an easement be recorded prior to the installation. The legal description and sketch of the easement are attached, along with the easement and agreements from FPL.

PREVIOUS ACTIONS: None

CONCURRENCES: N/A

FISCAL IMPACT:
Has request been budgeted? N/A
If yes, expected cost: N/A
Account Name: N/A
If no, amount needed: N/A
What account will funds be appropriated from: N/A
Additional Comments: None

RECOMMENDATION(S): Motion to Approve Ordinance

Attachment(s): Ordinance
Sketches and Legal Description of Proposed Easement-Exhibit "B"
"Notification of FPL Facilities" Agreement
"Underground Distribution Facilities Installation Agreement"
Exhibit "A"-Location Sketch
Metering Equipment Sketch
Easement
"Underground Conduit Installation Agreement"

ORDINANCE _____

AN ORDINANCE OF THE TOWN OF DAVIE, FLORIDA, AUTHORIZING THE APPROPRIATE TOWN OFFICIALS TO EXECUTE A UTILITY EASEMENT TO FLORIDA POWER AND LIGHT FOR THE "OAKES ROAD FIRE RESCUE STATION" PROJECT; PROVIDING FOR SEVERABILITY AND PROVIDING FOR AN EFFECTIVE DATE.

WHEREAS, Florida Power and Light is in need of an easement from the Town of Davie for the construction, operation, and maintenance of electric service for the new Oakes Road Fire Rescue Station; and

WHEREAS, in furtherance thereof, the Town of Davie desires to grant said easement to Florida Power and Light, a copy of which is attached hereto as Exhibit "B",

NOW, THEREFORE, BE IT ORDAINED BY THE TOWN COUNCIL OF THE TOWN OF DAVIE, FLORIDA.

SECTION 1. The Town Council of the Town of Davie hereby authorizes the appropriate Town officials to execute a utility easement with Florida Power and Light, a copy of which is attached hereto as Exhibit "B".

SECTION 2. This section, subsection, clause, phrase, or portion of this Ordinance is, for any reason, held invalid or unconstitutional by any Court of competent jurisdiction, such portion shall be deemed a separate, distinct, and independent provision and such holding shall not affect the validity of the remaining portions of this Ordinance.

SECTION 3. This ordinance shall take effect immediately upon its passage and adoption.

PASSED ON FIRST READING THIS ____DAY OF ___, 2004.

PASSED ON SECOND READING THIS ____ DAY OF ____, 2005.

_____

MAYOR/COUNCIL MEMBER

ATTEST:

_____

TOWN CLERK

APPROVED THIS __ DAY OF ___, 2005.

FPL

NOTIFICATION OF FPL FACILITIES

Customer/Agency: Town of Davie, Cheryl Dolin

Date of Meeting/Contact: 11/18/2004

Developer/Contractor: Town of Davie

Project Number/Name: WR# 1151905 Oaks Road Firestation

Location of Project: 4491 Oakes Rd

City: Davie

FPL Representative: Shane Forrester

Phone: 954-717-2083

FPL calls your attention to the fact that there may be energized, high voltage electric lines located in the area of this project. It is imperative that you visually survey the area prior to commencing construction and determine whether the construction of any proposed structures will bring any person, tool, machinery, equipment or object closer to FPL's power lines than the OSHA-prescribed limits. If it will, you must either re-design your project to allow it to be built safely given the pre-existing power lines, or make arrangements with FPL to deenergize and ground our facilities, or relocate them at your expense. **You must do this before allowing any construction near the power lines.** It is impossible for FPL to know or predict whether or not the contractors or subcontractors, and their employees, will operate or use cranes or other mobile equipment, or handle materials or tools, in dangerous proximity to such power lines during the course of construction, and, if so, when and where. Therefore, if it becomes necessary for any contractor or subcontractor, or their employees, to operate or handle cranes, draglines, mobile equipment, or any other equipment, tools or materials in such a manner that they might come closer to overhead power lines than is permitted by local, state or federal regulations, you and any such contractor or subcontractor must notify FPL in writing of such planned operation prior to the commencement thereof and make all necessary arrangements with FPL in order to carry out the work in a safe manner. **Any work in the vicinity of the electric lines should be suspended until these arrangements are finalized and implemented.**

FPL has certain minimum clearances that it must maintain. If you build your structure so that those clearances can not be maintained, you will be required to compensate FPL for the relocation of our facilities to comply with those clearances. As such, you should contact FPL prior to commencing construction near pre-existing overhead power lines to make sure that your proposed structure does not impinge upon FPL's clearances.

It is the responsibility of yourself, as well as each and every contractor and subcontractor on this project, to diligently fulfill the following obligations on their part:

1. Make absolutely certain that all persons responsible for operating or handling cranes, draglines, mobile equipment or any equipment, tool, or material capable of contacting a power line, have a copy of and are familiar with all applicable state and federal regulations, including but not limited to U.S. Department of Labor OSHA Regulations, before commencing their work;

2. Make sure that all cranes, draglines, mobile equipment, and all other equipment or materials capable of contacting a power line have attached to them any warning signs required by U.S. Department of Labor OSHA Regulations;

3. Post and maintain proper warning signs and advise all employees, new and old alike, of their obligation to stay a minimum of 10 feet away from any overhead power lines, and of the location of the lines, the hazards involved, and the protective measures to be taken.

A copy of this notification should be provided to each contractor and subcontractor on this project, to be shared with their supervision and employees prior to commencing work on this project.

Also be advised that FPL may have underground electrical lines within the limits of this project. Call our Underground Location Number at 1-800-432-4770, forty-eight hours in advance of construction to ensure facilities are located accurately.

Via Facsimile / Mail

Means by which this notification was provided to customer and/or contractor

6591 Orange Dr

Address

Shane A.

FPL Representative Signature

11/18/2004

Date

Form 380, Rev. 7/02

Work Request No 1151905

UNDERGROUND DISTRIBUTION FACILITIES INSTALLATION AGREEMENT

This Agreement, made this 18 day of November, 2004 by and between Town of Davie (hereinafter called the Customer) and Florida Power & Light Company, a corporation organized and existing under the laws of the State of Florida (hereinafter called FPL).

WITNESSETH:

Whereas, the Customer has applied to FPL for underground distribution facilities to be installed on Customer's property known as Oakes Road Fire Rescue Station located in Davie, Florida.
(City/County)

That for and in consideration of the covenants and agreements herein set forth, the parties hereto covenant and agree as follows:

1. The Customer shall pay FPL a Contribution in Aid of Construction of $1,607.45 (the Contribution) to cover the differential cost between an underground and an overhead system. This is based on the currently effective tariff filed with the Florida Public Service Commission by FPL and is broken down as follows: Radial From OH Source ($737.00) + Additional Charge Beyond Designated Point (145 ft * 9.17/ft) - Customer Installed PVC Credit (205' * 2.24/ft) = 1607.45.

2. That a credit of $459.20 shall be provided to the Customer for trenching, backfilling and the installation of Company provided conduit, if applicable and approved by FPL.

3. The contribution and credit are subject to adjustment when FPL's tariff is revised by the Florida Public Service Commission and the Customer has requested FPL to delay FPL's scheduled date of installation. Any additional costs caused by a Customer's change in the Customer's plans submitted to FPL on which the contribution was based shall be paid for by the Customer. The contribution does not include the cost of conversion of any existing overhead lines to underground or the relocation of any existing overhead or underground facilities to serve the property identified above.

4. That the Contribution provides for 120/208 volt, 3 phase (120/240 volt, single phase for URD Subdivisions) underground electrical service with facilities located on private property in easements as required by FPL. The Contribution is based on employment of rapid production techniques and cooperation to eliminate conflicts with other utilities. Underground service, secondary and primary conductors installed by FPL are to be of standard FPL design in conduit and with above grade appurtenances.

5. That the payment of the Contribution does not waive any provisions of FPL's Electric Tariff.

   If the property is subject to an underground ordinance, FPL shall notify the appropriate governmental agency that satisfactory arrangements have been made with the Customer as specified by FPL.

   Title to and ownership of the facilities installed by FPL as a result of this agreement shall at all times remain the property of FPL.

6. That good and sufficient easements, including legal descriptions and survey work to produce such easements, and mortgage subordinations required by FPL for the installation and maintenance of its electric distribution facilities must be granted or obtained, at no cost to FPL, prior to FPL's trenching, installation and/or construction of its facilities. FPL may require mortgage subordinations when the Customer's property, on which FPL will install its facilities, is mortgaged and (1) there are no provisions in the mortgage that the lien of the mortgage will be subordinate to utility easements, (2) FPL's easement has not been recorded prior to the recordation of the mortgage, (3) FPL's facilities are or will be used to serve other parcels of property, or (4) other circumstances exist which FPL determines would make such a subordination necessary.

   a) The Customer shall furnish FPL a copy of the deed or other suitable document which contains a full legal description and exact name of the legal owner to be used when an easement is prepared, as required by FPL.

   b) The Customer shall furnish drawings, satisfactory to FPL, showing the location of existing and proposed structures on the Customer's construction site, as required by FPL.

   c) Should for any reason, except for the sole error of FPL, FPL's facilities not be constructed within the easement, FPL may require the Customer to grant new easements and obtain any necessary mortgage subordinations to cover FPL's installed facilities, and FPL will release the existing easement. Mortgage subordinations will be necessary in this context when 1) the Customer's property on which FPL will install its facilities is mortgaged, 2) there are no provisions in the mortgage for subordination of the lien of the mortgage to utility easements, or 3) FPL's facilities are or will be used to serve other parcels of property.

7. Before FPL can begin its engineering work on the underground electric distribution facilities, the Customer shall provide FPL with the following:

   a) Paving, grading, and drainage plans showing all surface and sub-surface drainage satisfactory to FPL,

   b) A construction schedule,

   c) An estimate of when electric service will be required, and

   d) Copies of the Customer's final construction plans as well as other construction drawings (plot, site, sewage, electrical, etc.) requested by FPL. Plats provided by the Customer must be either recorded by the circuit clerk or other recording officer or prepared and certified as meeting the requirements for recording (except approval by the governing body) by a registered land surveyor.

8. Prior to FPL construction pursuant to this agreement, the Customer shall:

   a) Clear the FPL easement on the Customer's property of tree stumps, all trees, and other obstructions that conflict with construction, including the drainage of all flooded areas. The Customer shall be responsible for clearing, compacting, boulder and large rock removal, stump removal, paving and addressing other special conditions. The easement shall be graded to within six inches of final grade with soil stabilized.

   b) Provide property line and corner stakes, designated by a licensed surveyor, to establish a reference for locating the underground cable trench route in the easement and additional reference points when required by FPL. Also, the Customer shall provide stakes identifying the location, depth, size and type facility of all non-FPL underground facilities within or near the easement where FPL distribution facilities will be installed. The Customer shall maintain these stakes, and if any of these stakes are lost, destroyed or moved and FPL requires their use, the Customer shall replace the stakes at no cost to FPL, unless the stakes are lost, destroyed or moved by an agent, employee, contractor or subcontractor of FPL, in which case FPL will pay the Customer the cost of replacing the stakes.

c) It is further understood and agreed that subsequent relocation or repair of the FPL system, once installed, will be paid by the Customer if said relocation or repair is a result of a change in the grading by the Customer or any of the Customer's contractors or subcontractors from the time the underground facilities were installed; and, that subsequent repair to FPL's system, once installed, will be paid by the Customer if said repair is a result of damage caused by the Customer or any of the Customer's contractors or subcontractors

d) Provide sufficient and timely advance notice (56 days) as required by FPL, for FPL to install its underground distribution facilities prior to the installation of paving, landscaping, sodding, sprinkler systems, or other surface obstructions. In the absence of sufficient coordination, as determined by FPL, by the Customer, all additional costs for trenching and backfilling shall be paid by the Customer, and none of the costs of restoring paving, landscaping, grass, sprinkler systems and all other surface obstructions to their original condition, should they be installed prior to FPL's facilities, shall be borne by FPL.

e) Pay for all additional costs incurred by FPL which may include, but are not limited to, engineering design, administration and relocation expenses, due to changes made subsequent to this agreement on the subdivision or development layout or grade.

f) Provide applicable trenching, backfilling and installation of Company provided conduit in accordance with FPL specifications.

9. FPL shall:

a) Provide the Customer with a plan showing the location of all FPL underground facilities, point of delivery, and transformer locations and specifications required by FPL and to be adhered to by the Customer.

b) Install, own, and maintain the electric distribution facilities up to the designated point of delivery except when otherwise noted.

c) Request the Customer to participate in a pre-construction conference with the Customer's contractors, the FPL representatives and other utilities within six (6) weeks of the start of construction. At the pre-construction conference, FPL shall provide the Customer with an estimate of the date when service may be provided.

10. This Agreement is subject to FPL's Electric Tariff, including but not limited to the General Rules and Regulations for Electric Service and the Rules of the Florida Public Service Commission, as they are now written, or as they may be revised, amended or supplemented.

The Customer and FPL will coordinate closely in fulfilling obligations in order to avoid delays in providing permanent electric service at the time of the Customer's receipt of a certificate of occupancy.

Accepted:

11/18/2004

For FPL (Date)

Shane Forrester

(Print Name)

Accepted:

Customer (Date)

Witness (Date)

Witness (Date)

EXHIBIT 'A'

Location Sketch
(NTS)

Conduit Install Notes:
- Minimum Cover = 36"
- Maintain 12" seperation from other utilities
- At Pole Plug and Mark 1-5" conduit at Base of Pole on South Face

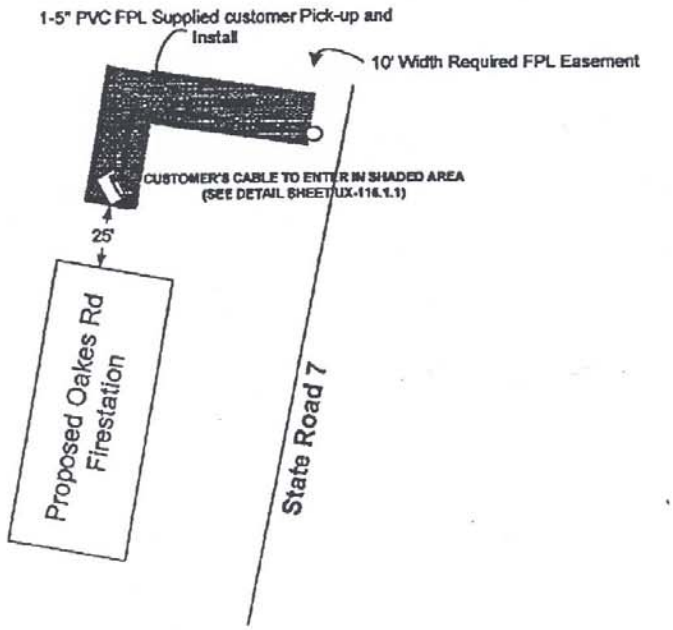

Service Voltage
120/208 Volt
Three Phase
Four Wire

Customer Project Manager: Shane Forrester
WR#1151905
11/18/2004

Transformer Pad Detail

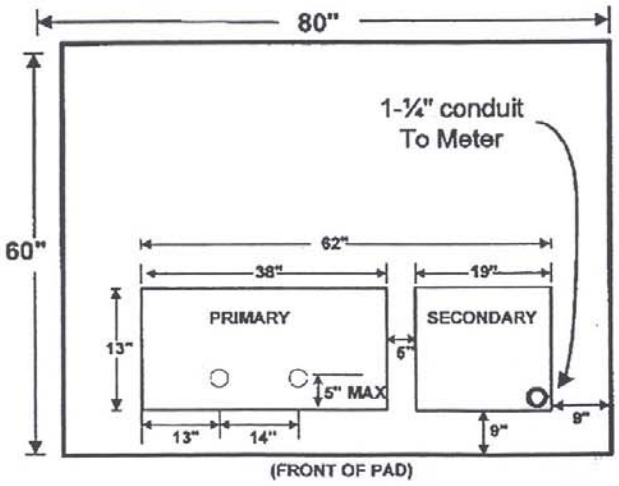

Metering Equipment and Location

CUSTOMER TO SUPPLY METER CAN

CT Meter Can Must not be further than 10' from Transformer.
See Attached E.S.S. Section VI Page 5 of 12

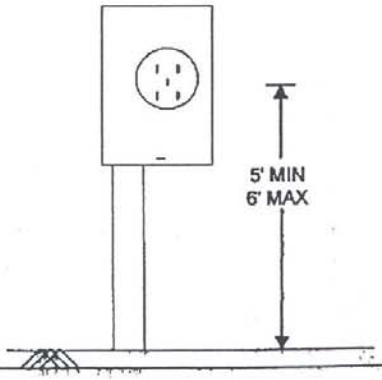

FIGURE VI-2
CT Metering Configuration 6 - CTs in Padmounted Transformer or Vault

1. IT rated meter socket provided and installed by customer: ____ 1ph or ✓ 3ph (check one)
2. Current transformers (CTs) provided and installed in padmounted transformer by FPL.
3. 1-1/4" rigid galvanized conduit with pull string installed (with bushings) or 1-1/4" Schedule 80 PVC conduit with pull string installed between meter socket and padmounted transformer provided and installed by customer. **For maximum distance between transformer and socket, see table below.**
4. Restricted to one customer per padmounted transformer. Exceptions must be approved by FPL.
5. CT ratio determined by FPL.

CT Ratio		Max Amps	Max Distance (feet)	Max Cable length (feet)
✓	Ratio			
X	300/5	600	10	20
	600/5	1200	40	50
	1200/5	2400	40	50
	2000/5	3000	40	50

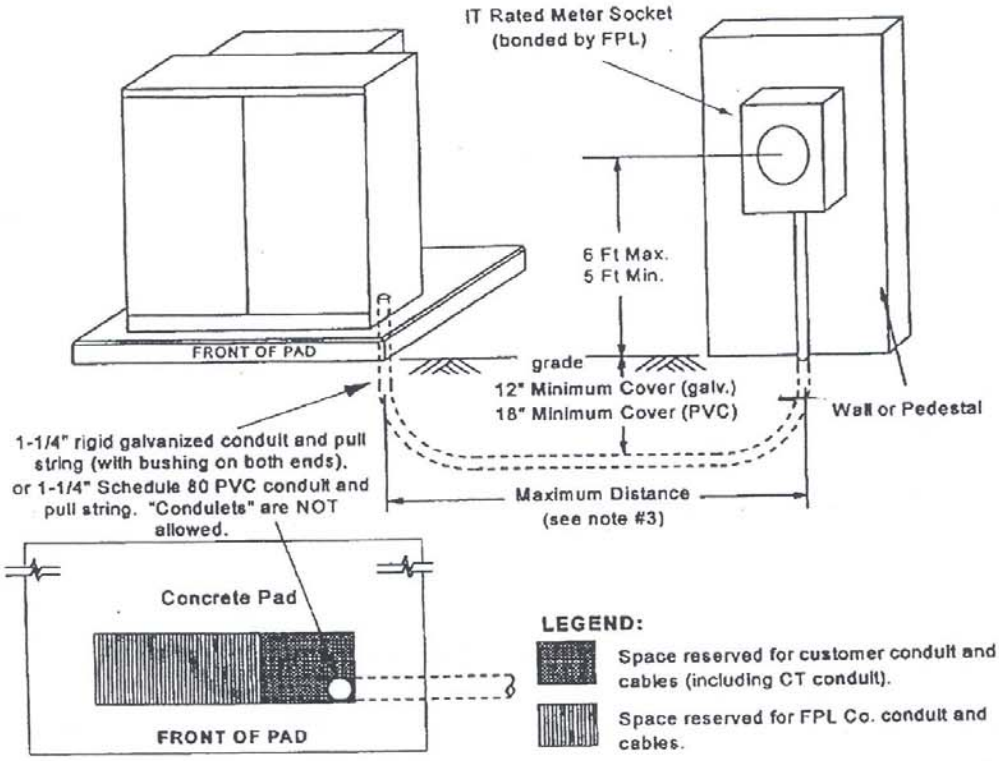

Work Request No. 1151905

Sec.25, Twp 50 S, Rge 41 E

Parcel I.D._____
(Maintained by County Appraiser)

Form 3722 (Stocked) Rev. 7/94

EASEMENT

This instrument Prepared By

Name: ____
Co. Name: Florida Power & Light Company
Address: ____
____

pg ____ of ____.

Reserved for Circuit Court

The undersigned, in consideration of the payment of $1.00 and other good and valuable consideration, the adequacy and receipt of which is hereby acknowledged, grant and give to Florida Power & Light Company, its licensees, agents, successors, and assigns, an easement forever for the construction, operation and maintenance of overhead and underground electric utility facilities (including wires, poles, guys, cables, conduits and appurtenant equipment) to be installed from time to time; with the right to reconstruct, improve, add to, enlarge, change the voltage, as well as, the size of and remove such facilities or any of them within an easement 10 feet in width described as follows:

Together with the right to permit any other person, firm or corporation to attach wires to any facilities hereunder and lay cable and conduit within the easement and to operate the same for communications purposes; the right of ingress and egress to said premises at all times; the right to clear the land and keep it cleared of all trees, undergrowth and other obstructions within the easement area; to trim and cut and keep trimmed and cut all dead, weak, leaning or dangerous trees or limbs outside of the easement area which might interfere with or fall upon the lines or systems of communications or power transmission or distribution; and further grants, to the fullest extent the undersigned has the power to grant, if at all, the rights hereinabove granted on the land heretofore described, over, along, under and across the roads, streets or highways adjoining or through said property.

IN WITNESS WHEREOF, the undersigned has signed and sealed this instrument on _____, 20__.

Signed, sealed and delivered in the presence of:

_____
(Witness' Signature)

Print Name: _____
(Witness)

_____
(Witness' Signature)

Print Name: _____
(Witness)

_____
(Corporate's name)

By: _____
(President's signature)

Print Name: _____

Print Address: _____

_____

Attest: _____
(Secretary's signature)

Print Name: _____

Print Address: _____

_____

(Corporate Seal)

STATE OF _____ AND COUNTY OF _____. The foregoing instrument was acknowledged before me this ____ day of _____, 20__, by _____, and _____ respectively the _____ President and _____ Secretary of _____, a _____ corporation, on behalf of said corporation, who are personally known to me or have produced _____ as identification, and who did (did not) take an oath.
(Type of Identification)

My Commission Expires:

_____
Notary Public, Signature

Print Name _____

UNDERGROUND CONDUIT INSTALLATION AGREEMENT FPL WR # 1151905

This Agreement, made this 18 day of November, 2005, by and between Town of Davie (hereinafter called the Customer) and Florida Power & Light Company, a corporation organized and existing under the laws of the State of Florida (hereinafter called FPL).

WHEREAS; the Customer has requested the pre-approval of the location and installation of underground distribution facilities to be located in a described FPL easement provided by the Customer.

WITNESSETH

That, for and in consideration of the covenants and agreements herein set forth, the parties hereto covenant and agree as follows:

1. The customer shall:

   a) install conduit, cable markers and associated materials provided by FPL in accordance with the instructions and specifications attached to this Agreement;

   b) be solely responsible for the installation of conduit at the correct location and the correct depth pursuant to the FPL construction drawing and specifications;

   c) provide reasonable notification of the conduit installation dates;

   d) at the discretion of FPL, either correct any discrepancies, within two (2) working days, found in the installation that are inconsistent with the instructions and specifications attached to this agreement or pay the associated cost to correct the installation within thirty (30) days of receiving the associated bill, and in either case, reimburse FPL for costs associated with lost crew time due to such discrepancies;

   e) provide survey points for FPL to stake the cable route;

   f) notify FPL when the conduit installation is complete;

   g) provide "as built" prints within two (2) weeks of final installation;

   h) provide for pick-up of materials;

   i) assume liability for materials lost, stolen or damaged once the customer receives material;

   j) assume liability for any delays and/or additional costs to FPL caused by a conduit installation that is not consistent with the instructions and specifications attached to this agreement.

2. FPL shall:

   a) provide written instructions and specifications for the installation of FPL provided conduit;

   b) provide required material to the Customer for the installation of underground facilities within the specified cable route;

   c) provide staking for the Customer along the specified cable route;

d) apply a credit in the amount of $459.20, in the event that the customer has made or has agreed to make a Contribution in Aid of Construction for the underground distribution facilities associated with this Agreement (if the credit exceeds the contribution, or if no contribution is required, a payment shall be made to the customer);

e) assume no liability for materials lost, stolen or damaged once received by the customer;

f) furnish any additional material at the current cost plus applicable loading and delivery charges;

g) assume no liability for delays caused by material delivery deficiency, including insufficient, lost, stolen or damaged material;

h) assume no liability for delays because of misunderstanding of installation drawings or specifications;

i) assume no liability for delays or additional cost caused by an inadequacy of the conduit system installation;

j) assume no liability for special incidental or consequential damages of any nature.

3. This agreement is subject to FPL's General Rules and Regulations for Electric Service and the Rules of the Florida Public Service Commission.

4. Customer agrees to protect, defend, indemnify and hold FPL, its officers, directors, employees, and agents (FPL Entities) free and unharmed from and against any and all claims, liabilities, loss, costs, or damages whatsoever, related to any claim made by tenants, invites, licensees, quests, any other or third parties, including court costs and attorney's fees, whether or not due to or caused in whole or part by the negligence of FPL Entities, resulting from or in connection with the performance of this Agreement by either party hereto

IN WITNESS WHEREOF the parties hereto have caused this Agreement to be duly executed to be effective as of the day and year written above.

APPLICANT:		FPL:	
SIGNED		SIGNED	
NAME		NAME	Shane Forrester
TITLE		TITLE	Customer Project Manager

ENGINEERS • PLANNERS • SURVEYORS
3563 N.W. 53RD STREET FORT LAUDERDALE, FLORIDA 33309 (954) 739-6400
FAX: (954) 739-6409

FOR: TOWN OF DAVIE

NOTE: THIS IS NOT A SKETCH OF SURVEY, but only a graphic depiction of the description shown hereon. There has been no field work, viewing of the subject property, or monuments set in connection with the preparation of the information shown hereon.

SKETCH TO ACCOMPANY DESCRIPTION
10' FPL EASEMENT

NORTH
SCALE 1" = 40'
0 40 80
SCALE IN FEET

LEGEND

BCR	BROWARD COUNTY RECORDS
BNDY	BOUNDARY
PB	PLAT BOOK
PG	PAGE
DCR	DADE COUNTY RECORDS
ROW	RIGHT OF WAY
SLY	SOUTHERLY
FPL	FLORIDA POWER AND LIGHT

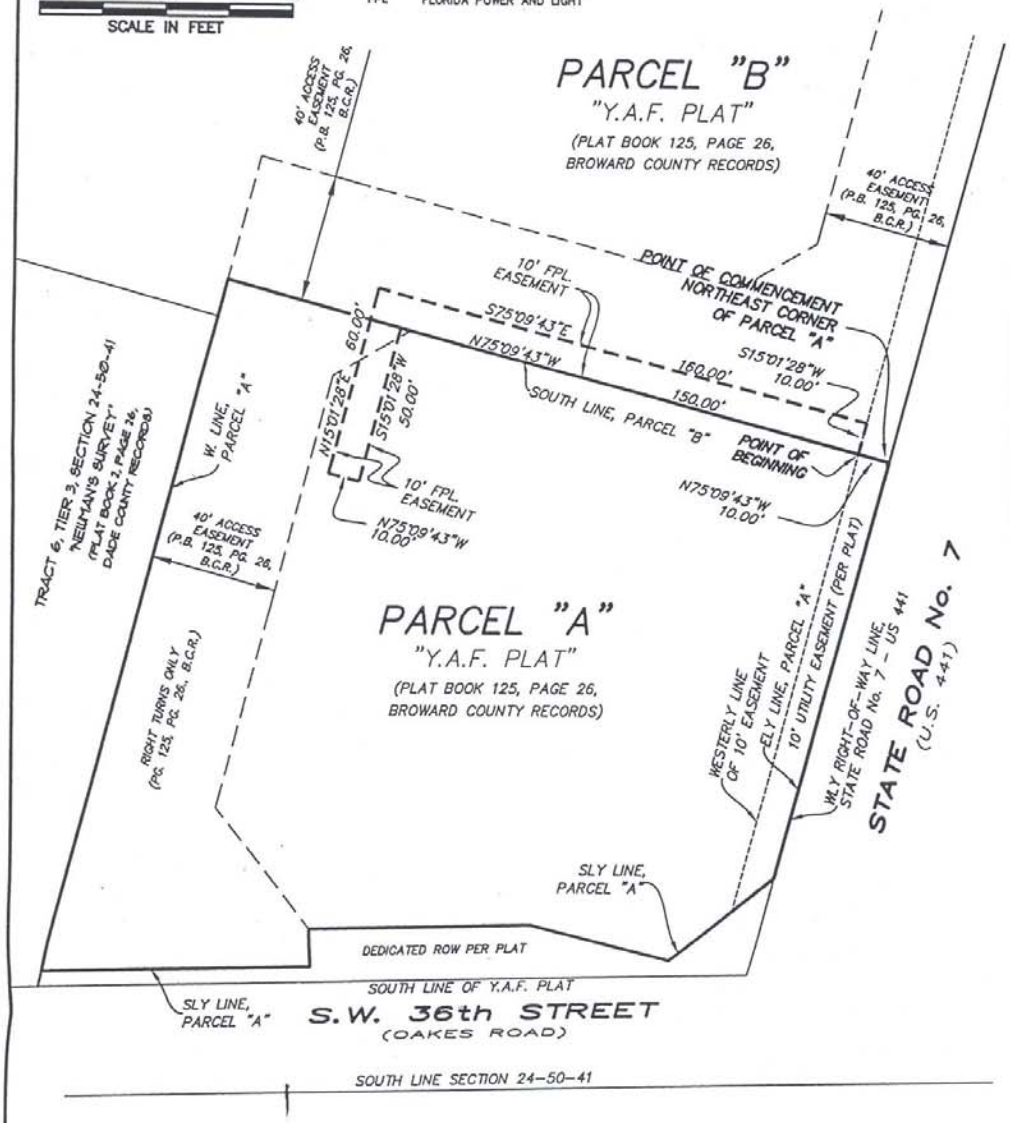

SHEET 2 OF 2

UPDATES and/or REVISIONS	DATE	BY	CK'D

NOTE The undersigned and CRAVEN-THOMPSON & ASSOCIATES, INC. make no representations or guarantees as to the information reflected hereon pertaining to easements, rights-of-way, set back lines, reservations, agreements and other similar matters, and further, this instrument is not intended to reflect or set forth all such matters. Such information should be obtained and confirmed by others through appropriate title verification.

NOTE Lands shown hereon were not abstracted for right-of-way and/or easements of record.

G:\2004\040001\ESMTS.dwg

JOB NO. 04-0001	DRAWN BY: SAR	CHECKED BY: JVN	F.B. N/A PG. N/A	DATED: 5/25/04

DESCRIPTION OF
10' FLORIDA POWER AND LIGHT
EASEMENT

A PORTION OF PARCELS 'A' AND 'B' OF THE "Y.A.F. PLAT", ACCORDING THE PLAT THEREOF, AS RECORDED IN PLAT BOOK 125, PAGE 26 OF THE PUBLIC RECORDS OF BROWARD COUNTY, FLORIDA, DESCRIBED AS FOLLOWS:

COMMENCE AT THE NORTHEAST CORNER OF PARCEL 'A' OF SAID "Y.A.F. PLAT"; **THENCE** NORTH 75°09'43" WEST, ALONG THE SOUTH LINE OF SAID PARCEL 'B', A DISTANCE OF 10.00 FEET TO THE **POINT OF BEGINNING**; **THENCE** CONTINUE NORTH 75°09'43" WEST, ALONG THE SOUTH LINE OF SAID PARCEL 'B', A DISTANCE OF 150.00 FEET; **THENCE** SOUTH 15°01'28" WEST, A DISTANCE OF 50.00 FEET; **THENCE** NORTH 75°09'43" WEST, A DISTANCE OF 10.00 FEET; **THENCE** NORTH 15°01'28" EAST, A DISTANCE OF 60.00 FEET; **THENCE** SOUTH 75°09'43" EAST, A DISTANCE OF 160.00 FEET; **THENCE** SOUTH 15°01'28" WEST, A DISTANCE OF 10.00 FEET TO THE **POINT OF BEGINNING**.

SAID LANDS SITUATE IN THE TOWN OF DAVIE, BROWARD COUNTY, FLORIDA, CONTAINING 2,100 SQUARE FEET, MORE OR LESS.

NOTE: BEARINGS SHOWN HEREON ARE BASED ON SAID "Y.A.F. PLAT", THE NORTH BOUNDARY OF PARCEL 'A' BEARS SOUTH 75°09'43" EAST.

CERTIFICATE:

WE HEREBY CERTIFY THAT THIS DESCRIPTION AND SKETCH CONFORMS TO CHAPTER 61G17-6 (FLORIDA ADMINISTRATIVE CODE), MINIMUM TECHNICAL STANDARDS FOR LAND SURVEYING IN THE STATE OF FLORIDA AS ADOPTED BY THE DEPARTMENT OF BUSINESS AND PROFESSIONAL REGULATION, BOARD OF PROFESSIONAL LAND SURVEYORS IN SEPTEMBER, 1981, AS AMENDED, PURSUANT TO CHAPTER 472.027 OF THE FLORIDA STATUTES, AND IS TRUE AND CORRECT TO THE BEST OF OUR KNOWLEDGE AND BELIEF.

CRAVEN THOMPSON & ASSOCIATES, INC. CERTIFICATE OF AUTHORIZATION LB271

BRENT A SPENCER
PROFESSIONAL SURVEYOR AND MAPPER NO. 6388, STATE OF FLORIDA

THIS SKETCH IS NOT VALID WITHOUT THE SIGNATURE AND THE ORIGINAL SEAL OF A FLORIDA LICENSED SURVEYOR AND MAPPER.